TOWN COUNCIL

Town of Trumbull

CONNECTICUT

www.trumbull-ct.gov

TOWN HALL
Trumbull

TELEPHONE
(203) 452-5005

AGENDA No. 676

I	CALL TO ORDER	DATE:	June 6, 2011
II	MOMENT OF SILENCE	TIME:	8:00 p.m.
III	PLEDGE OF ALLEGIANCE	PLACE:	Town Hall
IV	ROLL CALL		
V	APPROVAL OF MINUTES		
VI	BUSINESS		

NOTICE is hereby given that the Town Council of the Town of Trumbull, Connecticut will hold a regular meeting on Monday, June 6, 2011 at 8:00 p.m. at the Trumbull Town Hall, for the following purpose:

DISCUSSION ITEMS:

- Trumbull High School Building Committee Update: Chairman's Report; Owner's Rep Update; Architect's Update; Construction Manager Update.

---

1. Resolution TC 23-164: To consider and act upon a resolution which would approve the following programs as eligible under the Neighborhood Assistance Act: Trumbull nature and Arts Center-Greenhouse for Education; The Kennedy Center- Administrative Building Parking Lot and Expansion; Connecticut Radio Information System-Radio Reading Service at Trumbull Studio: St. Vincent's Special Needs Center, Inc.-Augmentative Communication Services. (L&A *Public Hearing*)

2. RESOLUTION TC23-165: To consider and act upon a resolution which would amend Chapter 19 Utilities, Article II Sewers and Sewage Disposal of the Trumbull Municipal Code to include Division 4, a municipal ordinance on the Discharge of Fats, Oils, and Grease in the Town of Trumbull. (L&A *Public Hearing*)(Attached)

3. RESOLUTION TC23-167: To consider and act upon a resolution entitled, "RESOLUTION AMENDING A RESOLUTION APPROPRIATING $28,540,000 FOR THE PLANNING, ACQUISITION AND CONSTRUCTION OF SANITARY SEWERS, PHASE IV, PART B, CONTRACT IV AND AUTHORIZING THE ISSUE OF $28,540,000 BONDS OR

NOTES OF THE TOWN TO MEET SAID APPROPRIATION AND PENDING THE ISSUANCE THEREOF THE MAKING OF TEMPORARY BORROWINGS FOR SUCH PURPOSE." (Finance) (Full Resolution Attached)

4. RESOLUTION TC23-168: To consider and act upon a resolution entitled, "RESOLUTION APPROPRIATING $7,150,000 FOR THE TRUMBULL CAPITAL IMPROVEMENT PLAN 2011-2012 AND AUTHORIZING THE ISSUE OF $7,150,000 BONDS OF THE TOWN TO MEET SAID APPROPRIATION AND PENDING THE ISSUANCE THEREOF THE MAKING OF TEMPORARY BORROWINGS FOR SUCH PURPOSE." (Finance) (Full Resolution Attached)

5. RESOLUTION TC23-169: To consider and act upon a resolution entitled, "RESOLUTION AMENDING A RESOLUTION APPROPRIATING $68,672,000 FOR THE COSTS ASSOCIATED WITH THE "RENOVATION AS NEW" AND EXPANSION OF TRUMBULL HIGH SCHOOL AND AUTHORIZING THE ISSUE OF $68,672,000 BONDS OF THE TOWN TO MEET SAID APPROPRIATION AND PENDING THE ISSUANCE THEREOF THE MAKING OF TEMPORARY BORROWINGS FOR SUCH PURPOSE." (Finance) (Full Resolution Attached)

6. RESOLUTION TC23-170: To consider and act upon a resolution entitled, "RESOLUTION MAKING CERTAIN FINDINGS WITH RESPECT TO UNEXPENDED BOND PROCEEDS OF THE TOWN AND APPROPRIATING SAID PROCEEDS FOR CAPITAL PURPOSES." (Finance) (Full Resolution Attached)

7. RESOLUTION TC23-166: To consider and act upon a resolution which would accept for initial review the First Draft of the Charter Revision. (L&A *Public Hearing*) (Town Council June 6, 2011 Public Hearing)

RESOLUTIONS

1. Resolution TC 23-164: BE IT RESOLVED, That the following programs as eligible under the Neighborhood Assistance Act: Trumbull nature and Arts Center-Greenhouse for Education; The Kennedy Center-Administrative Building Parking Lot and Expansion; Connecticut Radio Information System-Radio Reading Service at Trumbull Studio: St. Vincent's Special Needs Center, Inc.-Augmentative Communication Services are approved.

2. RESOLUTION TC23-165: BE IT RESOLVED AND ORDAINED, That Chapter 19 Utilities, Article II Sewers and Sewage Disposal of the Trumbull Municipal Code is hereby amended to include Division 4, a municipal ordinance on the Discharge of Fats, Oils, and Grease in the Town of Trumbull.

3. RESOLUTION TC23-167: BE IT RESOLVED, That a resolution entitled, "RESOLUTION AMENDING A RESOLUTION APPROPRIATING $28,540,000 FOR THE PLANNING, ACQUISITION AND CONSTRUCTION OF SANITARY SEWERS, PHASE IV, PART B, CONTRACT IV AND AUTHORIZING THE ISSUE OF $28,540,000 BONDS OR

NOTES OF THE TOWN TO MEET SAID APPROPRIATION AND PENDING THE ISSUANCE THEREOF THE MAKING OF TEMPORARY BORROWINGS FOR SUCH PURPOSE" is hereby approved.

4. RESOLUTION TC23-168: BE IT RESOLVED, That a resolution entitled, "RESOLUTION APPROPRIATING $7,150,000 FOR THE TRUMBULL CAPITAL IMPROVEMENT PLAN 2011-2012 AND AUTHORIZING THE ISSUE OF $7,150,000 BONDS OF THE TOWN TO MEET SAID APPROPRIATION AND PENDING THE ISSUANCE THEREOF THE MAKING OF TEMPORARY BORROWINGS FOR SUCH PURPOSE" is hereby approved.

5. RESOLUTION TC23-169: BE IT RESOLVED, That a resolution entitled, "RESOLUTION AMENDING A RESOLUTION APPROPRIATING $68,672,000 FOR THE COSTS ASSOCIATED WITH THE "RENOVATION AS NEW" AND EXPANSION OF TRUMBULL HIGH SCHOOL AND AUTHORIZING THE ISSUE OF $68,672,000 BONDS OF THE TOWN TO MEET SAID APPROPRIATION AND PENDING THE ISSUANCE THEREOF THE MAKING OF TEMPORARY BORROWINGS FOR SUCH PURPOSE."
is hereby approved.

6. RESOLUTION TC23-170: BE IT RESOLVED, That a resolution entitled, "RESOLUTION MAKING CERTAIN FINDINGS WITH RESPECT TO UNEXPENDED BOND PROCEEDS OF THE TOWN AND APPROPRIATING SAID PROCEEDS FOR CAPITAL PURPOSES" is hereby approved.

7. RESOLUTION TC23-166: BE IT RESOLVED, That the First Draft of the Charter Revision is hereby accepted for initial review.

Attachments

RESOLUTION TC23-165: PROPOSED FATS, OILS AND GREASE DISCHARGE ORDINANCE

INTRODUCTION

Regulations

The Connecticut Department of Environmental Protection's (CTDEP) General Permit for the Discharge of Wastewater Associated with Food Preparation Establishments (DEP-WATERP&SGP-001) and the Town of Trumbull, Sewer Use Ordinance govern the discharge of wastewater from Food Service Establishments to municipal treatment systems. This ordinance requires the installation of Fats, Oils and Grease (Hereinafter "FOG") pretreatment equipment to minimize the discharge of FOG to wastewater disposal systems. _____ has been charged with the responsibility of overseeing the pretreatment program for the sewer connections located within the Service Areas of Trumbull.

The Purpose of the FOG Pretreatment Program

The FOG Pretreatment Program was implemented to reduce the volume of animal fat, cooking oils, and frying grease discarded in wastewater. Grease discharged to municipal wastewater collection systems may accumulate at any location within the collection system. Over time, this accumulation can decrease the capacity of the sewer lines or entirely block the sewer lines, causing untreated sewage to overflow the sewer system, contaminating the surrounding soil and possibly entering businesses, and homes. Sewage overflowing the collection system can pose a threat to human health and the environment. The cleanup of sewage, the removal of the grease blockage, as well as replacement of damaged property costs the rate payers of the New London Utility System hundreds of thousands of dollars each year. The CT DEP has the general permit (DEP-WATERP&S-GP-001) to address this problem.

The terms *Trumbull, Water Pollution Control Authority* has been used to assist local program developers in determining the entity responsible for various program functions. As many entities have the potential to participate in varying aspects of program maintenance and enforcement, each local FOG program will have different delegation of responsibilities. Local program developers are encouraged to consider the resources available to their community and make changes to the following Model FOG Ordinance as needed to meet their municipality's needs. Other terms have been included in brackets {} for easy identification of items that might require modification for adoption by a municipality.

The term Trumbull in most cases will refer to the Town or City for which the program is set up. Under some circumstances or locations within this document this term could be a Water Pollution Control Authority (WPCA), a Local Building Official, a dedicated municipal FOG agency, a Health District or Health Department, a Department of Public Works, or a company contracted to oversee the FOG Program.

The entity referred to by the term *Authority* could be the Water Pollution Control Authority or its designee or the Local Building Official.

The term _____ refers to the entity performing the inspection and enforcement duties. This entity will in many cases be the same as the _____ but could be another agency or company designated by Trumbull or the Authority.

TABLE 1
Fats, Oils, and Grease Pretreatment Ordinance Sections

Section 1. Purpose.
Section 2. Definitions.
Section 3. Application to Install a FOG Pretreatment System.
Section 4. Discharge Limits.
Section 5. Pretreatment System Requirements.
Section 6. Alternate FOG Pretreatment System.
Section 7. Pretreatment Equipment Maintenance.
Section 8. FOG Minimization

RESOLUTION TC23-167: RESOLUTION AMENDING A RESOLUTION APPROPRIATING $28,540,000 FOR THE PLANNING, ACQUISITION AND CONSTRUCTION OF SANITARY SEWERS, PHASE IV, PART B, CONTRACT IV AND AUTHORIZING THE ISSUE OF $28,540,000 BONDS OR NOTES OF THE TOWN TO MEET SAID APPROPRIATION AND PENDING THE ISSUANCE THEREOF THE MAKING OF TEMPORARY BORROWINGS FOR SUCH PURPOSE

Section 1. The Town of Trumbull has to date adopted four bond authorizing resolutions to finance the planning, acquisition and construction of the Sanitary Sewers, Phase IV, Part B, Contract IV, (the "Project") consisting of an $850,000 bond authorizing resolution adopted by the Town Council on March 2, 2009, an additional $610,000 bond authorizing resolution adopted by the Town Council on May 4, 2009, and an additional $25.54 million bond authorization on September 8, 2009, and an additional $3 million amending resolution adopted by the Town Council on October 4, 2010 (collectively the "Prior Resolutions"). The total of the appropriations and bond issuance authorizations of the Prior Resolutions is $30.0 million. The Prior Resolutions are hereby ratified, confirmed and adopted. The sum of the appropriations and bond issuance authorizations for the Project after taking into account the additional $4.5 million of this amendment is $34.5 million.

Section 2. The Prior Resolution adopted October 4, 2010, entitled "RESOLUTION APPROPRIATING $28,540,000 FOR THE PLANNING, ACQUISITION AND CONSTRUCTION OF SANITARY SEWERS, PHASE IV, PART B, CONTRACT IV AND AUTHORIZING THE ISSUE OF $28,540,000 BONDS OR NOTES OF THE TOWN TO MEET SAID APPROPRIATION AND PENDING THE ISSUANCE THEREOF THE MAKING OF TEMPORARY BORROWINGS FOR SUCH PURPOSE" is amended to increase the appropriation and bond authorization therein by $4,500,000, from $28,540,000 to $33,040,000 as follows:

Section 1. The title of the Resolution is amended to read as follows:

RESOLUTION APPROPRIATING $33,040,000 FOR THE PLANNING, ACQUISITION AND CONSTRUCTION OF SANITARY SEWERS, PHASE IV, PART B, CONTRACT IV AND AUTHORIZING THE ISSUE OF $33,040,000 BONDS OR NOTES OF THE TOWN TO MEET SAID APPROPRIATION AND PENDING THE ISSUANCE THEREOF THE MAKING OF TEMPORARY BORROWINGS FOR SUCH PURPOSE

Section 2. Section 1 of the Resolution is amended to read as follows:

"Section 1. The sum of $33,040,000 is appropriated for the planning, acquisition and construction of the installation of sanitary sewers pursuant to Phase IV, Part B, Contract IV,

Efficiency and Science, Assistance to the Unemployed, and State and Local Fiscal Stabilization, for the Fiscal Year Ending September 30, 2009, and for other purposes" (the "American Recovery and Reinvestment Act of 2009"), as the same may be reauthorized or reenacted, or analogous legislation, including but not limited to any "tax credit bond," or "Build America Bonds" including Direct Payment and Tax Credit Versions."

RESOLUTION TC23-170: RESOLUTION MAKING CERTAIN FINDINGS WITH RESPECT TO UNEXPENDED BOND PROCEEDS OF THE TOWN AND APPROPRIATING SAID PROCEEDS FOR CAPITAL PURPOSES

Section 1. It is hereby found and determined that $338,000 of proceeds derived from the bonds issued pursuant to the $1,152,540 for the Replacement and Expansion of the Town's Public School Facilities (the "Bond Resolution") remain unexpended and are no longer required for the purpose issued, the individual projects being substantially complete. The Bond Resolution identifies in Exhibit A eight specific purposes and amounts for which the proceeds may be expended.

Section 2. The $338,000 above referenced unexpended bond proceeds are hereby reallocated for the following purposes:

	Project Unexpended Newly Appropriated	
Proceeds	Purpose	
1. Town Public School Facilities and Tax Credit Versions	$338,000	Hillcrest Pool Improvements

Section 6. The Town Officials, are hereby authorized to exercise all powers conferred by section 3-20e of the general statutes with respect to secondary market disclosure and to provide annual information and notices of material events as enumerated in Securities and Exchange Commission Exchange Act Rule 15c2-12, as amended, as may be necessary, appropriate or desirable to effect the sale of the bonds and notes authorized by this ordinance.

Section 7. It is hereby found and determined that it is in public interest to issue all, or a portion of, the Bonds, Notes or other obligations of the Town as qualified private activity bonds, or with interest that is includable in gross income of the holders thereof for purposes of federal income taxation. The Town Officials are hereby authorized to issue and utilize without further approval any financing alternative available to municipal governments pursuant to HR1, "Making Supplemental Appropriations for Job Preservation and Creation, Infrastructure Investment, Energy Efficiency and Science, Assistance to the Unemployed, and State and Local Fiscal Stabilization, for the Fiscal Year Ending September 30, 2009, and for other purposes" (the "American Recovery and Reinvestment Act of 2009"), as amended, reauthorized, or analogous legislation, including but not limited to any "tax credit bond," or "Build America Bonds" including Direct Payment and Tax Credit Versions

RESOLUTION TC23-169: RESOLUTION AMENDING A RESOLUTION APPROPRIATING $68,672,000 FOR THE COSTS ASSOCIATED WITH THE "RENOVATION AS NEW" AND EXPANSION OF TRUMBULL HIGH SCHOOL AND AUTHORIZING THE ISSUE OF $68,672,000 BONDS OF THE TOWN TO MEET SAID APPROPRIATION AND PENDING THE ISSUANCE THEREOF THE MAKING OF TEMPORARY BORROWINGS FOR SUCH PURPOSE

Section 1. The Town Council of the Town of Trumbull has to date adopted various bond authorizing resolutions to finance the planning, acquisition and construction of improvements to Trumbull High School, including a resolution entitled "Resolution Appropriating $68,672,000 For The Costs Associated With The "Renovation As New" And Expansion Of Trumbull High School And Authorizing The Issue Of $68,672,000 Bonds Of The Town To Meet Said Appropriation And Pending The Issuance Thereof The Making Of Temporary Borrowings For Such Purpose" on May 7, 2007, which "Prior Resolution" is hereby ratified, confirmed and adopted, as amended herein. The Prior Resolution is hereby amended by decreasing the appropriation and bond issuance authorization therein by $4 million, from $68,672,000 to $64,672,000 as follows:

Section 2. The title of the Resolution is amended to read as follows:

RESOLUTION APPROPRIATING $64,672,000 FOR THE COSTS ASSOCIATED WITH THE "RENOVATION AS NEW" AND EXPANSION OF TRUMBULL HIGH SCHOOL AND AUTHORIZING THE ISSUE OF $64,672,000 BONDS OF THE TOWN TO MEET SAID APPROPRIATION AND PENDING THE ISSUANCE THEREOF THE MAKING OF TEMPORARY BORROWINGS FOR SUCH PURPOSE

Section 3. The amount $64,672,000 is substituted for the amount $68,672,000 wherever $68,672,000 appears in the Prior Resolution adopted May 7, 2007.

Section 4. The following is inserted as section 11 of the Resolution:

"Section 11. It is hereby found and determined that it is in public interest to issue all, or a portion of, the Bonds, Notes or other obligations of the Town as qualified private activity bonds, or with interest that is includable in gross income of the holders thereof for purposes of federal income taxation. The First Selectman, Treasurer and Director of Finance, are hereby authorized to issue and utilize without further approval any financing alternative available to municipal governments pursuant to HR1, "Making Supplemental Appropriations for Job Preservation and Creation, Infrastructure Investment, Energy

and the interest thereon. The aggregate principal amount of the bonds to be issued, the annual installments of principal, redemption provisions, if any, the date, time of issue and sale and other terms, details and particulars of such bonds, shall be determined by the Town Officials, in accordance with the General Statutes of the State of Connecticut, as amended.

Section 3. Said bonds shall be sold by the Town Officials, in a competitive offering or by negotiation, in their discretion. If sold at competitive offering, the bonds shall be sold upon sealed proposals, auction, or similar competitive process at not less than par and accrued interest on the basis of the lowest net or true interest cost to the Town. A notice of sale or a summary thereof describing the bonds and setting forth the terms and conditions of the sale shall be published at least five days in advance of the sale in a recognized publication carrying municipal bond notices and devoted primarily to financial news and the subject of state and municipal bonds. If the bonds are sold by negotiation, the provisions of purchase agreement shall be subject to approval of the Town Council.

Section 4. The Town Officials, are authorized to make temporary borrowings in anticipation of the receipt of the proceeds of said bonds. Notes evidencing such borrowings shall be executed in the name and on behalf of the Town by the manual or facsimile signatures of the Town Officials, bear the Town seal or a facsimile thereof, be payable at a bank or trust company designated by the Town Officials, be approved as to their legality by Joseph Fasi LLC, of Hartford, and be certified by a bank or trust company designated by the Town Officials, pursuant to Section 7-373 of the General Statutes of Connecticut, as amended. They shall be issued with maturity dates which comply with the provisions of the General Statutes governing the issuance of such notes, as the same may be amended from time to time. The notes shall be general obligations of the Town and each of the notes shall recite that every requirement of law relating to its issue has been duly complied with, that such note is within every debt and other limit prescribed by law, and that the full faith and credit of the Town are pledged to the payment of the principal thereof and the interest thereon. The net interest cost on such notes, including renewals thereof, and the expense of preparing, issuing and marketing them, to the extent paid from the proceeds of such renewals or said bonds, shall be included as a cost of the project. Upon the sale of said bonds, the proceeds thereof, to the extent required, shall be applied forthwith to the payment of the principal of and the interest on any such notes then outstanding or shall be deposited with a bank or trust company in trust for such purpose.

Section 5. Resolution of Official Intent to Reimburse Expenditures with Borrowings. The Town (the "Issuer") hereby expresses its official intent pursuant to §1.150-2 of the Federal Income Tax Regulations, Title 26 (the "Regulations"), to reimburse expenditures paid sixty days prior to and after the date of passage of this ordinance in the maximum amount and for the capital project defined in Section 1 with the proceeds of bonds, notes, or other obligations ("Bonds") authorized to be issued by the Issuer. The Bonds shall be issued to reimburse such expenditures not later than 18 months after the later of the date of the expenditure or the substantial completion of the project, or such later date the Regulations may authorize. The Issuer hereby certifies that the intention to reimburse as expressed herein is based upon its reasonable expectations as of this date. The Director of Finance or his designee is authorized to pay project expenses in accordance herewith pending the issuance of reimbursement bonds, and to amend this declaration.

other funds available for such purpose to pay the principal of and the interest on all temporary borrowings in anticipation of the receipt of the proceeds of said bonds outstanding at the time of the issuance thereof, and to pay for the administrative, printing and legal costs of issuing the bonds. Capital project revenues, including bid premiums and investment income derived from investment of bond proceeds (and net investment income derived from note proceeds) are authorized to be credited by the Director of Finance to the project account and expended to pay project expenses customarily paid therefrom. The remaining appropriation and bond authorization shall be reduced by the amount of capital project revenues so credited. The bonds shall be in the denomination of $1,000 or a whole multiple thereof, or, be combined with other bonds of the Town and such combined issue shall be in the denomination per aggregate maturity of $1,000 or a whole multiple thereof, be issued in bearer form or in fully registered form, be executed in the name and on behalf of the Town by the manual or facsimile signatures of the Town Officials, bear the Town seal or a facsimile thereof, be certified by a bank or trust company designated by the Town Officials, which bank or trust company may be designated the registrar and transfer agent, be payable at a bank or trust company designated by the Town Officials, and be approved as to their legality by Joseph Fasi LLC, of Hartford. They shall bear such rate or rates of interest as shall be determined by the Town Officials. The bonds shall be general obligations of the Town and each of the bonds shall recite that every requirement of law relating to its issue has been duly complied with, that such bond is within every debt and other limit prescribed by law, and that the full faith and credit of the Town are pledged to the payment of the principal thereof

including the North Nichols area of Town, or so much thereof, or such additional streets within the area as shall be determined by the Water Pollution Control Authority and First Selectman, and as may be accomplished within said appropriation and bond authorization provided herein, and including gravity sewer lines, grinder pumps, force mains, pump stations, manholes, acquisition easements and other interest in property, associated utility, street and drainage improvements, repair and relocation, appurtenances related thereto, licenses and permits, blasting if and as necessary, and for testing, surveying, paving, engineering, administrative, advertising, printing, legal, financing costs (hereafter the "Project"). Said appropriation shall be inclusive of state and federal grants in aid of the thereof, and in addition to all prior appropriations for the Project."

Section 3. The amount $33,040,000 is substituted for the amount $28,540,000 wherever $28,540,000 appears in the Prior Resolution of October 4, 2010.

Section 4. The following is section 12 of the Resolution as amended:

"Section 12. It is hereby found and determined that it is in public interest to issue all, or a portion of, the Bonds, Notes or other obligations of the Town as qualified private activity bonds, or with interest that is includable in gross income of the holders thereof for purposes of federal income taxation. The First Selectman, Treasurer and Director of Finance, are hereby authorized to issue and utilize without further approval any financing alternative available to municipal governments pursuant to HR1, "Making Supplemental Appropriations for Job Preservation and Creation, Infrastructure Investment, Energy Efficiency and Science, Assistance to the Unemployed, and State and Local Fiscal Stabilization, for the Fiscal Year Ending September 30, 2009, and for other purposes" (the "American Recovery and Reinvestment Act of 2009"), as the same may be reauthorized or reenacted, or analogous legislation, including but not limited to any "tax credit bond," or "Build America Bonds" including Direct Payment and Tax Credit Versions."

RESOLUTION TC23-168:
AS AMENDED

RESOLUTION APPROPRIATING $7,150,000 FOR THE TRUMBULL CAPITAL IMPROVEMENT PLAN 2011-2012 AND AUTHORIZING THE ISSUE OF $7,150,000 BONDS OF THE TOWN TO MEET SAID APPROPRIATION AND PENDING THE ISSUANCE THEREOF THE MAKING OF TEMPORARY BORROWINGS FOR SUCH PURPOSE

Section 1. The sum of $7,150,000 is appropriated for the planning, acquisition and construction of the Town of Trumbull Capital Improvement Plan 2011-2012, as adopted and amended by the Town Council from time to time, and consisting of: (i) Board of Education; (ii) Roadway reconstruction and improvement (iii) Public facilities; (vi) Fleet and equipment; (vii) other projects; and for appurtenances, equipment and services related thereto, or so much thereof as may be accomplished within such appropriation, including administrative, advertising, printing, legal and financing costs to the extent paid therefrom, said appropriation to be in addition to all prior appropriations for said purpose. The Town Council may by resolution transfer funding herein authorized among projects within the 2011-2012 CIP.

Section 2. To meet said appropriation $7,150,000 bonds of the Town or so much thereof as shall be necessary for such purpose, shall be issued, maturing not later than the twentieth year after their date. Said bonds may be issued in one or more series as determined by the First Selectman and the and the Town Treasurer (hereafter the Town Officials), and the amount of bonds of each series to be issued shall be fixed by the Town Officials. Said bonds shall be issued in the amount not be less than an amount which will provide funds sufficient with

RESOLUTION TC: : To consider and act upon a resolution which would approve the following programs as eligible under the Neighborhood Assistance Act: Trumbull Nature and Arts Center – Greenhouse for Education; The Kennedy Center – Administrative Building Parking Lot and Expansion; Connecticut Radio Information System – Radio Reading Service at Trumbull Studio; St. Vincent's Special Needs Center, Inc. – Augmentative Communication Services. (Public Hearing Needed) (L&A).

Agency	Program	Amount
1. Trumbull Nature & Arts Center	Greenhouse for Environmental Education	2,500
2. CRIS - Connecticut Radio Information Services	Program serving blind and print handicapped individuals in Trumbull	$10,000
3. Kennedy Center	Administrative Building Parking Lot Repair and Extension	$133,497
4. St. Vincent's Special Needs Center, Inc. (dba St. Vincent's Special Needs Services)	Augmentative Communication Services	$20,000
Total		$165,997.00

Background:

2011 NEIGHBORHOOD ASSISTANCE ACT TAX CREDIT PROGRAM

The Connecticut Neighborhood Assistance Act (NAA) Tax Credit Program is **designed to provide funding for municipal and tax exempt organizations through business tax credit incentives for businesses that make cash contributions to approved entities.** Businesses can receive a credit of **60%** of contributions to organizations approved by the CT Department of Revenue Services.

June 24, 2011

Mr. Michael Gallagher
Department of Revenue Services (DRS)
25 Sigourney St Ste 2
Hartford, CT 06106

Subject: Trumbull 2011 Neighborhood Assistance Tax Credit Program Proposals

Dear Mr. Gallaher,

Enclosed please find six application proposals for the 2010 Neighborhood Assistance Tax Credit Program from eligible agencies in the Town of Trumbull, Connecticut. The proposals included are as follows:

Agency	Program	Amount
1. Trumbull Nature & Arts Center	Greenhouse for Environmental Education	2,500
2. CRIS - Connecticut Radio Information Services	Program serving blind and print handicapped individuals in Trumbull	$10,000
3. Kennedy Center	Administrative Building Parking Lot Repair and Extension	$133,497
4. St. Vincent's Special Needs Center, Inc. (dba St. Vincent's Special Needs Services)	Augmentative Communication Services	$20,000
	TOTAL	$165,997

Included in the proposal, please also find the following:

- Public Notice listed in the CT Post Newspaper for the June 6, 2011 public hearing
- Agenda and Meeting Minutes of the Public Hearing held on June 6, 2011 by the Legislation and Administration Committee of the Trumbull Town Council
- Agenda and Meeting Minutes of the Town Council Meeting held on June 6, 2011 to adopt the Resolution
- Signed, Notarized, and Certified Resolution of the six approved eligible programs.

Please call me at 203.452.5043, or email me at dcox@trumbull-ct.gov if you have any questions.

Sincerely,

Deborah Evans Cox
Director, Economic Development
Town of Trumbull, Connecticut

5866 Main Street, Trumbull, CT 06611 ~ dcox@trumbull-ct.gov ~ (203) 452-5043

Municipality: Town of Trumbull

2011 Connecticut Neighborhood Assistance Act Program

Agency	Program	Amount
1. Trumbull Nature & Arts Center	Greenhouse for Environmental Education	2,500
2. CRIS - Connecticut Radio Information Services	Program serving blind and print handicapped individuals in Trumbull	$10,000
3. Kennedy Center	Administrative Building Parking Lot Repair and Extension	$133,497
4. St. Vincent's Special Needs Center, Inc. (dba St. Vincent's Special Needs Services)	Augmentative Communication Services	$20,000
Total		$165,997.00

RESOLUTION TC : To consider and act upon a resolution which would approve the following programs as eligible under the Neighborhood Assistance Act: Trumbull Nature and Arts Center – Greenhouse for Education; The Kennedy Center – Administrative Building Parking Lot and Expansion; Connecticut Radio Information System – Radio Reading Service at Trumbull Studio; St. Vincent's Special Needs Center, Inc. – Augmentative Communication Services; (Public Hearing Needed) (L&A).

Resolution TC23-167

Resolution 5-11-01

RESOLUTION AMENDING A RESOLUTION APPROPRIATING $28,540,000 FOR THE PLANNING, ACQUISITION AND CONSTRUCTION OF SANITARY SEWERS, PHASE IV, PART B, CONTRACT IV AND AUTHORIZING THE ISSUE OF $28,540,000 BONDS OR NOTES OF THE TOWN TO MEET SAID APPROPRIATION AND PENDING THE ISSUANCE THEREOF THE MAKING OF TEMPORARY BORROWINGS FOR SUCH PURPOSE

Section 1. The Town of Trumbull has to date adopted four bond authorizing resolutions to finance the planning, acquisition and construction of the Sanitary Sewers, Phase IV, Part B, Contract IV, (the "Project") consisting of an $850,000 bond authorizing resolution adopted by the Town Council on March 2, 2009, an additional $610,000 bond authorizing resolution adopted by the Town Council on May 4, 2009, and an additional $25.54 million bond authorization on September 8, 2009, and an additional $3 million amending resolution adopted by the Town Council on October 4, 2010 (collectively the "Prior Resolutions"). The total of the appropriations and bond issuance authorizations of the Prior Resolutions is $30.0 million. The Prior Resolutions are hereby ratified, confirmed and adopted. The sum of the appropriations and bond issuance authorizations for the Project after taking into account the additional $4.5 million of this amendment is $34.5 million.

Section 2. The Prior Resolution adopted October 4, 2010, entitled "RESOLUTION APPROPRIATING $28,540,000 FOR THE PLANNING, ACQUISITION AND CONSTRUCTION OF SANITARY SEWERS, PHASE IV, PART B, CONTRACT IV AND AUTHORIZING THE ISSUE OF $28,540,000 BONDS OR NOTES OF THE TOWN TO MEET SAID APPROPRIATION AND PENDING THE ISSUANCE THEREOF THE MAKING OF TEMPORARY BORROWINGS FOR SUCH PURPOSE" is amended to increase the appropriation and bond authorization therein by $4,500,000, from $28,540,000 to $33,040,000 as follows:

Section 1. The title of the Resolution is amended to read as follows:

RESOLUTION APPROPRIATING $33,040,000 FOR THE PLANNING, ACQUISITION AND CONSTRUCTION OF SANITARY SEWERS, PHASE IV, PART B, CONTRACT IV AND AUTHORIZING THE ISSUE OF $33,040,000 BONDS OR NOTES OF THE TOWN TO MEET SAID APPROPRIATION AND PENDING THE ISSUANCE THEREOF THE MAKING OF TEMPORARY BORROWINGS FOR SUCH PURPOSE

Section 2. Section 1 of the Resolution is amended to read as follows:

"Section 1. The sum of $33,040,000 is appropriated for the planning, acquisition and construction of the installation of sanitary sewers pursuant to Phase IV, Part B, Contract IV,

5-11-01

including the North Nichols area of Town, or so much thereof, or such additional streets within the area as shall be determined by the Water Pollution Control Authority and First Selectman, and as may be accomplished within said appropriation and bond authorization provided herein, and including gravity sewer lines, grinder pumps, force mains, pump stations, manholes, acquisition easements and other interest in property, associated utility, street and drainage improvements, repair and relocation, appurtenances related thereto, licenses and permits, blasting if and as necessary, and for testing, surveying, paving, engineering, administrative, advertising, printing, legal, financing costs (hereafter the "Project"). Said appropriation shall be inclusive of state and federal grants in aid of the thereof, and in addition to all prior appropriations for the Project."

Section 3. The amount $33,040,000 is substituted for the amount $28,540,000 wherever $28,540,000 appears in the Prior Resolution of October 4, 2010.

Section 4. The following is section 12 of the Resolution as amended:

"Section 12. It is hereby found and determined that it is in public interest to issue all, or a portion of, the Bonds, Notes or other obligations of the Town as qualified private activity bonds, or with interest that is includable in gross income of the holders thereof for purposes of federal income taxation. The First Selectman, Treasurer and Director of Finance, are hereby authorized to issue and utilize without further approval any financing alternative available to municipal governments pursuant to HR1, "Making Supplemental Appropriations for Job Preservation and Creation, Infrastructure Investment, Energy Efficiency and Science, Assistance to the Unemployed, and State and Local Fiscal Stabilization, for the Fiscal Year Ending September 30, 2009, and for other purposes" (the "American Recovery and Reinvestment Act of 2009"), as the same may be reauthorized or reenacted, or analogous legislation, including but not limited to any "tax credit bond," or "Build America Bonds" including Direct Payment and Tax Credit Versions."

Resolution 5-11-01

TOWN OF TRUMBULL			
BONDING RESOLUTIONS			
CONTRACT IV, NORTH NICHOLS			
	3/2 and 5/4/2009		
	BONDING RESOLUTION AMOUNT	BONDING RESOLUTION AMOUNT	TOTAL
Resolution dated March 2, 2009	850,000		
Resolution dated May 4, 2009	610,000		
Resolution dated September 8, 2009		25,540,000	
	1,460,000	25,540,000	27,000,000
Resolution Dated October 4, 2010	-	3,000,000	3,000,000
	1,460,000	28,540,000	30,000,000
Proposed resolution dated May 12, 2011	-	4,500,000	4,500,000
	1,460,000	33,040,000	34,500,000

Resolution 5-11-01

Item 6. RESOLUTION TC22-158: Moved by Mr. London, seconded by Mr. Pescatore

BE IT RESOLVED, That Eric Michel of 29 Catherine Street, be and the same is hereby reappointed as a member of the Land Acquisition and Preservation Committee for a term extending to the first Monday in December, 2013.

Committee report: R&R Committee met February 23, 2009 and voted 2-0 to recommend.

VOTE: Adopted unanimously

Item 7. RESOLUTION TC22-159: Moved by Ms. Bivona, seconded by Ms. Bochet

BE IT RESOLVED, That Kevin Petriello of 54 Pert Street, be and the same is hereby appointed as a member of the Trumbull Day Commission for a term extending to September 1, 2011.

Committee report: R&R Committee met February 23, 2009 and voted 2-0 to recommend.

VOTE: Adopted unanimously

Item 8. RESOLUTION TC22-160: Moved by Ms. Deyoe, seconded by Mr. Reale

BE IT RESOLVED, That Michael Vartulli of 75 Daniels Farm Road, be and the same is hereby appointed as a member of the Trumbull Day Commission for a term extending to September 1, 2012.

Committee report: Finance Committee met February 24, 2009 and voted 2-0 to recommend.

VOTE: Adopted unanimously

Item 9. RESOLUTION TC22-161: Held in Committee

Item10. RESOLUTION TC22-162: Held in Committee

Item 11. RESOLUTION TC22-163: Moved by Mr. Scinto, seconded by Mr. DelVecchio

BE IT RESOLVED, That $850,000 is hereby appropriated for the planning, acquisition and construction of sanitary sewers, phase IV, part B contract IV, and authorizing the issue of $850,000 of bonds or notes of the Town to meet said appropriation and pending the issuance thereof the making of temporary borrowings for such purpose.

5-11-01

Committee report: Finance Committee met February 24, 2009 and voted 3-0 to recommend.

Joe Solemene, Trumbull WPCA Administrator, explained this portion of the Jog Hill project is known as the North Nichols project and it is a $400,000 windfall for the residents. There are some short term bonding costs associated with the borrowing that are included in the appropriation. Only the amount that is spent will be used. When the rest of the Jog Hill project is completed, the amount of the North Nichols project will be added to it. The people serviced by this Contract will pay their share. Based on the $4 million dollars of reconstructive work that will be done by the State on Huntington Road, (North Nichols Project), Mr. Solemene believes the Town will be a big winner.

VOTE: Adopted 18-2 (Opposed: Ciocci, Mark)

Moved by Mr. DelVecchio, seconded by Mr. Molinoff to make this emergency legislation.

VOTE: Adopted 19-1 (Opposed: Pescatore)

Item 12. RESOLUTION TC22-164: Moved by Mr. DelVecchio, seconded by Mr. Marconi

BE IT RESOLVED, That $50,450 is hereby appropriated from the unreserved fund balance to EMS Salaries-PT 01022600-501102 and EMS Overtime 01022600-501105.

Committee report: Finance Committee me on February 24, 2009 and voted to amend by to amend by inserting the amount $50,000 after the Salaries account number and $450.00 after the Overtime account number.

Chairman recognized the committee report as an amendment.

VOTE: Passed unanimously

VOTE: Adopted unanimously as amended

Item 13. RESOLUTION TC22-165: Moved by Ms. Testani, seconded by Mr. DelVecchio

BE IT RESOLVED, That First Selectman Raymond G. Baldwin, Jr., be and the same is hereby authorized to sign, on behalf of the Town of Trumbull, an application and contract with the State Library for a Historic Preservation Grant.

Committee report: L&A Committee met February 23, 2009 and voted 4-0 to recommend.

VOTE: Adopted unanimously

5-11-01

Item 2. RESOLUTION TC22-178: Moved by Mr. Scinto, seconded by Mr. Pescatore

BE IT RESOLVED, That the First Selectman's reappointment of Diane Simone Ruotolo of 18 Nuthatch Hill Road, be and the same as a member of the Trumbull Day Commission is hereby approved for a term extending to September 1, 2012.

Committee report: R&R Committee met April 27, 2009 and voted 4-0 to recommend.

VOTE: Adopted unanimously

DISCUSSION ITEM: Trumbull High School Building Committee Update

Al Barbarotta, Owner's Representative, explained the project is on schedule and the local review is complete. The Committee is currently reviewing the bids for commissioning services. JCJ and O&G have been working closely together. There are 14 bid packages that have been put together for Phase I. A Threshold Review is being done now to review the structural components of the project. The plans will go back to the State for review next week and Mr. Barbarotta is hopeful that the Committee will be given authorization to go out to bid by May 15th.

Item 3. RESOLUTION TC22-179: Moved by Mr. Molinoff, seconded by Ms. Thornton

BE IT RESOLVED, That the First Selectman's reappointment of Rose Marie Derrig of 48 Tait Road, be and the same as a member of the Trumbull Day Commission is hereby approved for a term extending to September 1, 2013.

Committee report: R&R Committee met April 27, 2009 and voted 4-0 to recommend.

VOTE: Passed 15-1 (Opposed: Rappa)

Item 4. RESOLUTION TC22-195: Moved by Ms. Deyoe, seconded by Mr. London

BE IT RESOLVED, That an additional $610,000 is hereby appropriated for the planning, acquisition and construction of sanitary sewers, Phase IV, Part B, Contract IV, and authorizing the issue of an additional $610,000 bonds or notes of the Town to meet said appropriation and pending the issuance thereof the making of temporary borrowings for such purpose.

Committee report: Finance Committee met April 28, 2009 and voted 5-0 to recommend.

Finance Director Lynn Heim explained this request is for appraisals, purchasing easements and administrative costs for the entire Nichols project, not just Huntington Road.

5-11-01

Mr. DelVecchio, Director of Public Works, explained they were pressed by the state and federal governments to get the Huntington Road portion of the sewer project started. After the sewers have been installed, extensive work on the road will be done by the State. These numbers weren't available when the request was made for the construction funding.

Bond Counsel Michael Andreana explained that typically during the acquisition or construction phase of the project, the town would issue short term debt until the numbers are finalized then it would be rolled into long term debt. You bond only what you need.

VOTE: Adopted unanimously

Item 5. RESOLUTION TC22-196: Moved by Mr. Marconi, seconded by Mr. Molinoff

BE IT RESOLVED, That $1,360,000 is hereby appropriated for the replacement of the roof at Jane Ryan School, and authorizing the issue of $1,360,000 bonds of the Town to meet said appropriation and pending the issuance thereof the making of temporary borrowings for such purpose.

Committee report: Finance Committee met April 28, 2009 and voted 5-0 to recommend.

Al Barbarotta explained that if the work is not completed during the summer then, if need be, the work would continue after school hours. The contract would be adjusted so as not to incur additional expense.

Bond Counsel Michael Andreana explained there is no law that says this has to be bonded for 20 years. Typically amortization schedules are matched up with the estimated useful life of a capital project as opposed to the dollar amount of the bond.

VOTE: Adopted unanimously

Item 6. RESOLUTION TC22-197: Moved by Mr. London, seconded by Mr. Pescatore

BE IT RESOLVED, That the following programs are hereby approved as eligible under the Neighborhood Assistance Act: St. Vincent's Special Needs Center, Inc. – Augmentative Communication Services; Trumbull Nature and Arts Center –Outdoor classroom pavilion; Trumbull Nature and Arts Center – Greenhouse; Trumbull Nature and Arts Center – renewable energy features for the gallery space; Connecticut Radio Information System, Inc. aka CRIS – CRIS Radio Reading Services.

Committee report: R&R Committee met April 27, 2009 and after conducting a public hearing, voted 4-0 to recommend.

VOTE: Adopted unanimously

5-11-01

Moved by Ms. Lamberti, seconded by Mr. Pescatore to amend the second date in the second paragraph to 2009.

VOTE: Passed unanimously

On behalf of the entire Town Council, Chairman Altieri congratulated Mr. Horton for the admirable work that he has done with all the students that have participated in band over the years. Band Director Horton received a standing ovation accompanied by warm applause from the Town Council and audience.

VOTE: Adopted unanimously as amended

Item 2. RESOLUTION TC22-218: Moved by Mr. Marconi, seconded by Ms. Bochet

BE IT RESOLVED, That the reappointment by the First Selectman of Brian Vaughn of 64 Surry Lane as a member of the Trumbull Monroe Health District is hereby approved for a term extending to the first Monday in March, 2009.

Committee report: R&R Committee met on August 31, 2009 and voted 3-0 to recommend.

Moved by Mr. Marconi, seconded by Ms. Bivona to amend the term date to 2012.

VOTE: Passed unanimously

VOTE: Adopted unanimously as amended

Item 3. RESOLUTION TC22-219: Moved by Mr. Marconi, seconded by Ms. Bochet

BE IT RESOLVED, That the reappointment by the First Selectman of Geoffrey Gladstein of 60 Frederick Street is hereby approved as a member of the Trumbull Monroe Health District for a term extending to the first Monday in March, 2011.

Committee report: R&R Committee met on August 31, 2009 and voted 3-0 to recommend.

VOTE: Adopted unanimously

Item 4. RESOLUTION TC22-222: Moved by Ms. Lamberti, seconded by Mr. Pescatore

BE IT RESOLVED, That an additional $25,540,000 is hereby appropriated for the planning, acquisition and construction of sanitary sewers, Phase IV, Part B, Contract IV, and authorizing the issue of an additional $25,540,000 bonds or notes of the town to meet said appropriation and pending the issuance thereof the making of temporary borrowings for such purpose.

5-11-01

Committee report: Finance Committee met on September 1, 2009 and voted 6-0 to recommend.

Bond Counsel John Stafstrom of Pullman & Comley explained this amount is for the construction to complete the project. There were 2 small appropriations for easements that were made previously.

Mr. Rappa thanked Sewer Administrator Joe Solemene for his efforts on the recent project in District 1 and his willingness to work with all parties involved to do the best job for the town. He suggested that in the future, a representative from the W.P.C.A. be available to help answer questions.

Mr. Solemene explained that after the funding is approved for a project, a letter is sent to the residents in that area explaining the street will be marked, phone numbers to call for information and things of that nature. He plans to work more closely with the Contractor to provide better estimates on how long the project is anticipated to take.

Ms. Mark stated she believes thee sanitary sewers are not necessarily environmentally responsible. She believes the individual septic systems have done an acceptable job of handling the waste and are costly to the homeowners.

VOTE: Adopted 15-0-1 (Abstention: Mark)

Moved by Mr. DelVecchio, seconded by Mr. Rotondo to make this emergency legislation.

VOTE: Adopted 15-1 (Opposed: Mark)

Item 5. RESOLUTION TC22-223: Moved by Ms. Deyoe, seconded by Ms. Bivona

BE IT RESOLVED that the First Selectman is hereby authorized to enter into a two year agreement with IgniteSpirit, LLC to provide Economic Development consulting services.

Committee report: L&A Committee met on August 31, 2009 and voted 3-0 to recommend.

Town Attorney Dan Schopick explained that IgniteSpirit, LLC is a single member LLC. Deborah Cox is the single member. At Attorney Schopick's request, the contract is with the LLC for the benefit of the town.

Mr. Pescatore stated that the RFQ documents show that Deborah Evans Cox was a bidder. One the contract, the name is IgniteSpirit, LLC. He asked Attorney Schopick if it is legal to award the contract to a non-bidder.

Attorney Schopick explained he does not consider her to be a non-bidder. It was the town's request that the agreement be made with the LLC. It was not Ms. Cox's choice and it was not her wish.

REVISED 5-11-09

TOWN OF TRUMBULL						
BONDING RESOLUTION SCHEDULE						
CONTRACT IV, NORTH NICHOLS	3/2/2009 and 5/4/2009	April 4, 2009	Sept 8, 2009	Oct 4, 2010	May 12, 2011	
	PREVIOUS Bonding Resolutions	PREVIOUS Bonding Resolutions	Incorporates All Prior Bond Resolutions	AMENDED Bonding Resolution	AMENDED Bonding Resolution	NET CHANGE
Mark IV Constr Costs		$ 24,902,073	$ 24,902,073	$ 25,017,988		
BID $24,902,073.29		115,915	115,915		$ 115,915	
Change order $115,914.89 (#20100420)						
Mark IV Constr Costs						
Per Tighe & Bond Revised report					28,763,273	
dated 5/5/2011, Table 1				1,078,631		
Mark IV-Huntington Rd Ext-Paid amount						
Huntington Rd Extension						
Mark IV-Bond Resolution dated 3/2/2009	850,000		1,460,000		1,460,000	
Mark IV-Bond Resolution dated 5/4/2009	610,000					
	1,460,000	25,017,988	26,477,988	26,096,619	30,339,188	4,242,569
Residential Grinder Pumps Installation Bid . (PO # .20100775)				$ 336,000	$ 336,000	
Stancor Grinder Pumps (PO #20101189)				$ 86,016	$ 86,016	
Easements				$ 17,450	$ 17,450	
Appraisals -Greater Realty (PO #20090840, PO #20081149)				$ 171,300	$ 171,300	
Acquisitions				$ 145,000	$ 145,000	
20 C Hilltop Circle						
Maps				$ 76,000	$ 76,000	
(2-15-09 - Invoice #13574)				$ 1,750	$ 1,750	
(5-24-09 - Invoice #13715)				$ 1,200	$ 1,200	
(9-27-09 - Invoice #13911)				$ 5,100	$ 5,100	
(10-11-09 - Invoice #13917)						
				$ 507,402	$ 507,402	
Design-Spath						
Additional Design Services				1,000	1,000	
(2-15-09 - Invoice #13576)				20,401	20,401	
(2-28-09 - Invoice #13592)				875	875	
(3-23-09 - Invoice #1361)				270	270	
(5-24-09 - Invoice #13697)				5,988	5,988	
(10-11-09 - Invoice #13918)				2,000	2,000	
(10-11-09 - Invoice #13920)				3,600	3,600	
(5-5-10) - Invoice # 14132)				105	105	
(5-9-10) - Invoice #14152)				500	500	
(5-17-10 - Invoice # 14158)						
				$ 961,000	$ 961,000	
Inspection (Tighe & Bond)				$ 80,000	$ 80,000	
Jack McKenzie? ADDED BY COMMISSION						
Miscellaneous-Charte, Clerk of Superior Court				$ 1,997	$ 1,997	
Giangrasso Electric Inc. (6-20-10 - Invoice #01-3232)		381,369		$ 121	$ 121	
Automatic Rain Inc. (6-3-10 - Invoice #9786)						
				$ 900,000	$ 900,000	
Contingency Costs						
	$ 1,460,000	$ 25,399,357	$ 26,477,988	$ 29,421,693	$ 33,664,262	$ 4,242,569
Bonding .(Based on 2%)		$ 507,987	$ 529,560	$ 588,434	$ 673,285	$ 84,851
TOTAL PROJECTED COST TO DATE	$ 1,460,000	$ 25,907,344	$ 27,007,548	$ 30,010,127	$ 34,337,547	$ 4,327,420

5-11-01

Revised

29-0201-1-1
May 5, 2011

WPCA Commission
Town of Trumbull
5866 Main Street
Trumbull, CT 06611

Re: **Trumbull Sanitary Sewers**
Phase IV, Part B, Contract 4
North Nichols Area

Dear Commissioners:

Tighe & Bond has prepared this letter at the request of the WPCA Commission which summarizes the Verification of Bid Quantities and Cost Estimates for the Contract IV project, which was based on reviewing the bid drawings and re-measuring the pay items. We have found differences in quantities of several "newly measured" items when compared to quantities from the bid sheet.

The construction cost based on the original bid quantities and units prices was $24,902,073. Utilizing the new quantities, the projected change order costs and a pavement restoration program, and included the work previously completed on Huntington Road, we have updated the construction estimate to $29,841,904.

The significant items that are included in the 'newly measured" items that contributed to the cost increase was the quantity of Rock and the allowance for Trafficmen.

The bid form had included 38,000 cubic yards of rock to be removed at a cost of $100.00 per cubic yard. Based on the newly measured quantities and a check on the actual production rate of removal rock per lineal foot of sewer, we estimated that the rock quantity could approach 61,767 cubic yards, which is valued at $2,376,000.

The bid form had included and estimated amount of $500,000 for Trafficmen. We have estimated that this pay item may exceed the bid allowance by $300,000.

Several of the other pay items are estimated to increase and several items are estimated to decrease in quantity during construction. In summing all of the bid items and utilizing the newly measured items, the net increase to the contract is $2,302,356.

Approved and pending change orders, allowances for drainage and miscellaneous items and a paving program to address issues with the existing roads account for the remaining $3,362,000 increase in the construction budget.

As of March 31, 2011, there have been 39 change order requests that have been approved totaling $400,358. There have been also 5 pending change order requests submitted totaling $264,006.09.

5-11-01

Pavement Repair: Permanent Pavement Repair is based on the Tighe & Bond draft report dated January 31, 2011. The cost for this work is estimated to be $5,810,000. There will be a credit for existing bid items estimated to be at $4,125,030.

Mediation Agreement: Based on the mediation agreement there will be the following costs that will be additional pay items:

- Removal/disposal of existing catch basins and storm piping for an estimated amount of $66,100.
- Connections to existing catch basins and connections to existing manholes for an estimated amount of $11,500.

Cost sharing of 50% for the wetland delineation and wetland mapping associated with DEP Strom water Discharge Permit for Construction Activities and an Army Corps of Engineers Permit for an estimated amount of $25,000

Miscellaneous unforeseen change order items are estimated to add approximately $100,000 to the project.

It is estimated that a reduction of $668,000 may be realized for minimizing the use of trench drains.

The Value Engineering Design will provide an estimated reduction of bid item quantities in the amount of $300,000.

The following is our current summary of the project construction cost as of this date:

TABLE 1

Contract Bid Amount	$24,902,073
Adjustment for "newly measured" bid items	$2,302,356
Mediation Items (removal/disposal of catch basins and pipe)	$66,010
Mediation Items (connection to existing catch basins and manholes)	$11,500
Reduce trench drain by 75% (Bid Item 30)	-$668,000
Value Engineering Design Savings	-$300,000
Change order requests approved through March 31, 2011	$400,358
Change order requests - Pending	$264,006
Change Order - Project Wide Permanent Pavement Restoration	$5,810,000
Change Order - Credits for Bid Item 1, 72, 73 and 75	-$4,125,030
Change Order - Miscellaneous items	$100,000
Contract IV TOTAL ESTIMATED CONSTRUCTION COSTS	**$28,763,273**
Huntington Road Sewer Extension (actual paid to contractor)	**$1,078,631**
Total Estimated Construction Cost	**$29,841,904**

5-11-01

Our Original proposal to provide engineering services to the Commission from July 2010 through June 2011, which included Construction Observation, Construction Administration Project Review and Assessment, was for a budget of $961,000.

The following table is an estimate of engineering and technical fees to provide construction observation and engineering services to the Commission through June 2011:

TABLE 2

Tighe & Bond Fee	**Actual**
The effort expended through Feb 2011 is:	
◦ Resident and Construction Observation Services	$396,721
◦ Construction Administration Services	$113,025
◦ Project Assessment	$51,476
◦ Value Engineering Design	$17,454
◦ Geotech Services - Pavement & Dogwood Pond	$25,605
◦ Pavement Evaluation and Drainage Inventory	$25,080
◦ Arbitration Support	$9,720
Sub-total 2/28/2011	**$639,081**
The estimated effort that will be expended from March 2011 through June 2011:	
◦ Resident and Construction Observation Services	$328,000
◦ Construction Administration Services	$80,000
◦ ACOE wetland delineation and permitting	$25,000
Sub-total March 2011 through June 2011	**$433,000**

Total from July 2010 through June 2011	**$1,072,081**
Less current contract amount	**-$961,000**
Additional amount for current contract	**$111,081**

DRAFT

5-11-01

We estimate the following effort will be required for engineering and technical services through the project completion (sewer construction in December 2011 and paving and restoration by July 2012):

TABLE 3

	Budget
The estimated effort that will be expended from July 2011 through November 2011 for sewer installation:	
◦ Resident & Construction Observation Services	$355,000
◦ Construction Administration Services	$85,000
◦ Miscellaneous Tasks	$20,000
Total from July 2011 through December 2011	**$460,000**
The estimated effort that will be expended from March 2012 through July 2012 for roadway paving:	
◦ Resident and Construction Observation Services	$200,000
◦ Construction Administration Services	$50,000
◦ Laboratory/Testing Services during paving	$50,000
◦ Miscellaneous tasks	$25,000
Total from March 2012 through July 2012	**$325,000**
Additional amount for current contract (from table 2)	**$111,081**
Total Additional fee	**$896,081**

We look forward to having an opportunity to meet with you to discuss this information provided in this letter.

Very truly yours,
TIGHE & BOND, INC.

Alfred J. Mascia, Jr. P.E.
Project Manager

John W. Black, P.E. L.S.
Senior Vice President

Enclosures:

J:\T\T0201\DATA\Estimate\cost verification letter-03-30-2011.doc

DRAFT

Resolution 5-11-01

Summary of Bid Documents

The Town of Trumbull scheduled and advertised bid #5795 for Phase IV Part B Contract 4 North Nichols on March 30, 2009. The bid quantities were prepared by Spath Bjorklund, the design engineering firm for contract 4. "The Bid for Constructing Sanitary Sewers" dated February 19, 2009 reflects the bid quantities and specifications for the March 30, 2009 bid opening. Item #69 on page 11 includes an approximate quantity of 76,000 cubic yards of rock removal for trench excavation for the sewer construction project.

On March 30, 2009, the bid opening for contract 4 was canceled by the Town.

The Town of Trumbull scheduled and advertised bid#5795 (Rebid) for Phase IV Part B Contract 4 North Nichols on May 20, 2009. Item #67 & Item#68 on page 8 of Addendum 1 & 2 reflect a specification and quantity change, where earth is included with rock as an item to be removed and the quantity has been reduced from 76,000 cubic yards of rock in the original bid to 38,000 cubic yards of rock and earth for trench excavation.

The rebid included Item#67 & Item #68 and bids were accepted on May 20, 2009.

The Town acknowledged and accepted Mark IV Construction Company as being the lowest bidder for the North Nichols sewer expansion project. The company bid $0.01 on Item#67 trench excavation-earth and $100.00 on Item#68 trench excavation-rock. The total projected cost for rock removal was $3,800,000.00.

In the May 5, 2011 Draft Report submitted to the Trumbull WPCA, Tighe & Bond identified newly measured quantities in the North Nichols sewer expansion project. Tighe & Bond estimated that rock removal could approach an estimated 61,767 cubic yards resulting in a potential difference of more than 23,000 cubic yards of rock in addition to the 38,000 cubic yards specified in the bid. Tighe & Bond's estimate is based on the newly measured quantities and a check on the actual production rate of removal rock per lineal foot of sewer The difference represents an increase in contract costs of approximately $2,376,000.00.

#14
5-11-01

BID

FOR

CONSTRUCTING SANITARY SEWERS

TRUMBULL CONNECTICUT

PHASE 4, PART B, CONTRACT 4

RAYMOND G. BALDWIN JR., First Selectman

Prepared for the

WATER POLLUTION CONTROL AUTHORITY

GEORGE BIAGIONI, Chairman
JACK GONCALVES, Vice Chairman

JANINE SALVEY
DONALD AIELLO
FRED RADFORD

JOHN DELVECCHIO
Director of Public Works

February 19, 2009

Item	Approx. Quan. & Unit Meas.	Items With Unit Prices Written In Words	Unit Price Dollars & Cents	Extended Total
64.	7765**LF.	18" CPP Storm Drainage (0-10') deep		
65.	300** LF.	24" CPP Storm Drainage (0-10') deep		
66.	14 Ea.	Test Holes for Gas Main Verification		
67.	15 Ea.	Stream, River & Culvert Crossing (< 10' Bank to bank)		
68.	13 Ea.	Core Drilling Existing Sanitary Manholes		
69.	76000 CY (assumed 7'+)	Trench Excavation-Rock		
70.	15150 CY	Borrow		
71.	20000 CY	Gravel Fill		
72.	35900 CY	Foundation Stone		
73.	19500 CY	Sub-base Grade "B"		
74.	46800 SY**	Gutter-milling of Existing Pvmt.		
75.	52800 SY	Temporary Bituminous Repair		

Item	Approx. Quan. & Unit Meas.	Items With Unit Prices Written In Words	Unit Price Dollars & Cents	Extended Total
76.	324233SY	Permanent Pavement Repair *includes permanent bituminous concrete overlay*		
77.	23500 LF**	Bituminous Curb (with back up grading)		
78.	1 L.S.	Restoration		
79.	2 Ea.	Project Sign		
80.	85635 L.F.	Television Pipeline Inspection		
71.	1 LS.	Pump Station - Complete		

* This quantity was modified by the Town based on previous experiences of new sanitary sewer installations in existing roads. The location and placement of these extra items not indicated on the drawings, if required, will be at the discretion of the Town Road Inspector in the field.

** This quantity was computed by the Town and is based on recent inspections and the opinions of the Town Road Inspector. The location and placement of these extra items not indicated on the drawings, if required, will be at the discretion of the Town Road Inspector in the field.

5-11-01

PURCHASING
DEPARTMENT

TOWN OF TRUMBULL

Town Hall
5866 Main Street
Trumbull, Connecticut
06611

Purchasing Agent
203.452.5042
Fax: 203.452.5083
rchimini@trumbull-ct.org

March 30, 2009

RE: BID # 5795 SEWER EXPANSION PHASE IV, PART B, CONTRACT IV

The above referenced bid opening scheduled for today is canceled. No bids shall be accepted or opened today for Bid # 5795.

A revised bid will be issued after a detailed review of the bid conditions and technical specifications.

All parties that have purchased bid documents will be advised of the new bid date and shall be provided all revisions at no additional cost.

Thank you,

R. Chimini
Purchasing Agent

TOWN OF TRUMBULL
INVITATION TO BID
SANITARY SEWER PROJECT
PHASE IV, PART B, CONTRACT IV

BID # 5715 **DUE: MARCH 30, 2009**

Sealed bids will be received at the office of the Purchasing Agent, Town Hall, Trumbull, Connecticut, on the date indicated above and publicly opened at **3:00 PM** for of Phase IV, Part B, Contract IV, Sanitary Sewer System for the Trumbull Water Pollution Control Authority (WPCA). Bidders may not withdraw a bid within a period of ninety (90) days after the actual opening thereof.

This contract will provide sanitary sewer service to approximately 837 houses (approximately 20 miles) and includes the installation of approximately 24,400 L.F. of 6" PVC Sanitary Laterals, 86,800 L.F. of 8", 10" and 12" sanitary sewer pipe with manholes and 81.000 L.F. of trench drains, storm drainage and structures. Contract Documents as prepared by the WPCA consist of Information for Bidders, Bid, Agreement, General Conditions, supplemental General Conditions, Contract Drawings, Specifications and Exhibits and may be examined in the office of the WPCA at the Trumbull Town Hall and shall be available March 2.

Copies of the Contract Documents may be obtained directly from the WPCA, Trumbull Town Hall, upon payment by check of two hundred fifty dollars **($250.00)** made payable to Town of Trumbull for each set. Bidders returning Bid Documents in good condition within ten (ten) days of bid opening will be refunded the bid deposit.

All work performed in connection with this project shall comply with the State of Connecticut Prevailing Wage Laws, the Governor's Executive Order No. 3.

A Bid Security (Bid Bond) in the amount of five percent (5%) of the Proposal is required for all bidders. A Performance Bond and Payment Bond, each in the amount of 100 percent (100%) of the Contract price with a corporate surety approved by the Town of Trumbull shall be required.

The Town reserves the right to reject any or all bids and to waive any requirements, irregularities to technical defects therein when it is deemed to be in the best interest of the Town of Trumbull.

Robert J. Chimini
Purchasing Agent

PUBLIC NOTICES

PUBLIC NOTICE

Child-Care Funding
Applications Available

The Bridgeport School Readiness and Child Day Care application will be available through March 6th, 2009 at the Bridgeport Public School Readiness Office.

Officials from programs interested in applying for funding may request the application and direct questions to the School Readiness office (203) 275-1265.

Center-based programs that serve children ages 3 and 4 and offer full-day, full year programs can apply for funding by completing an application by March 13th, 2009

To be eligible programs must be licensed by the state Department of Public Health or be exempt from licensing.

CONNECTICUT RESOURCES RECOVERY AUTHORITY
NOTICE TO FIRMS
REQUEST FOR PROPOSALS

The Connecticut Resources Recovery Authority ("CRRA") is a quasi-public entity of the State of Connecticut that is responsible for implementing the State Solid Waste Management Plan and is currently providing solid waste disposal and recycling services to over half of the municipalities in the state. CRRA has developed, constructed, and now operates an integrated system of three resource recovery facilities, two regional recycling centers, four transfer stations and an electricity generating facility. CRRA is also responsible for five closed landfills. At present, CRRA accepts more than 65% of the municipal solid waste generated in the State. These facilities are operated by entities that are under contract with CRRA.

CRRA is requesting proposals from qualified firms to perform independent auditing services for the audits for Fiscal Years 2009, 2010 and 2011. The contract period will be from June 1, 2009 through March 31, 2012.

Request for Proposal ("RFP") package documents may be obtained on the World Wide Web at http://www.crra.org under the "Business Opportunities" page beginning **Monday, March 2, 2009.** The documents will also be available Monday through Friday, from 8:30 a.m. to 5:00 p.m. at the offices of CRRA, 100 Constitution Plaza, 6th Floor, Hartford, Connecticut 06103-1722, beginning on the same date. Anyone intending to pick up the documents at CRRA's offices must contact Ronald Gingerich [(860) 757-7703] at least 24 hours in advance.

CRRA encourages firms and individuals interested in this RFP to submit a Notice Of Interest Form to CRRA by **3:00 p.m., Friday, March 13, 2009.** The Notice Of Interest Form is available on CRRA's web site along with the other RFP documents. While not mandatory, CRRA will use the information provided on the form to notify prospective proposers about the availability of addenda and other information related to the RFP.

Sealed proposals must be received at the offices of CRRA, 100 Constitution Plaza, 6th Floor, Hartford, Connecticut 06103-1722 no later than 3:00 p.m., Thursday, April 2, 2009. Proposals received after the time and date set forth above shall be rejected. All proposals shall remain open for one hundred twenty (120) days after the proposal due date.

Proposals will be opened at CRRA's convenience on or after the proposal due date. Note that all information submitted by a proposer is subject to the Freedom of In-

PUBLIC NOTICES

TOWN OF TRUMBULL
INVITATION TO BID
SANITARY SEWER PROJECT

BID # 5795 DUE: MARCH 30, 2009 @ 3:00 PM

Sealed bids will be received at the office of the Purchasing Agent, Town Hall, Trumbull, CT, on the date and time indicated above and publicly opened for the Sanitary Sewer System Project - Phase IV, Part B, Contract IV - Trumbull Water Pollution Control Authority (WPCA). This contract shall provide sanitary sewer service to approximately 837 houses (approximately 20 miles) and include installation of approximately 24,400 L.F. of 6" PVC sanitary laterals, 86,800 L.F. of 8", 10" and 12" sanitary sewer pipe with manholes and 81,000 L.F. of trench drains, storm drainage and structures.

Contract Documents prepared by the WPCA consist of Information for Bidders, Bid, Agreement, General Conditions, supplemental General Conditions, Contract Drawings, Specifications and Exhibits and may be examined at the WPCA office in Trumbull Town Hall and may be obtained upon payment by check (payable to Town of Trumbull) for two hundred fifty dollars ($250) per. Bidders returning bid documents in good condition within ten (ten) days of bid opening shall be refunded the bid deposit.

All work performed in connection with this project shall comply with the State of Connecticut Prevailing Wage Laws, the Governor's Executive Order No. 3.

A Bid Security (Bid Bond) in the amount of five percent (5%) of the Proposal is required from all bidders. A Performance Bond and Payment Bond, each in the amount of 100 percent (100%) of the Contract price with a corporate surety approved by the Town of Trumbull shall be required. Bidders may not withdraw a bid within a period of ninety (90) days after the actual opening thereof.

The Town reserves the right to reject any or all bids and to waive any requirements, irregularities to technical defects therein when it is deemed to be in the best interest of the Town of Trumbull.

Robert J. Chimini
Purchasing Agent

CUSTODIAN I
Open Competitive exam # 2285
Fee - $10 - Bridgeport Residents
$40 - Non-Residents
Issued: February 25, 2009

NOTICE

The Civil Service Commission of the City of Bridgeport will hold an open competitive examination for CUSTODIAN I. The exact time and location will be announced at a later date.

APPLICATIONS: Each candidate must complete an application form supplied by the Commission and file it at the Office of the Commission. Application forms, to be accepted, should be delivered personally, or bear a postmark, not later than **March 27, 2009.**

SALARY RANGE: $32,227 - $33,125; appointments to be made at the minimum or entrance salary of $32,227 a year. Advancements within the salary range may be made in accordance with the terms of the contract between the City of Bridgeport and N.A.G.E., Local R1-200.

DUTIES: Custodian work of ordinary difficulty and responsibility, involving independent activity in the cleaning, care and minor maintenance of a school, library, City Hall, or similar City buildings; related work as required; performed under general supervision.

Typical Tasks or Assignments: Does custodial work involving heating and the cleaning and care of floors, walls, ceilings, windows, furniture, and of all equipment and facilities; without complete custodian responsibility, works under supervision in a high school or very large building; assists in cleaning and servicing boilers and ventilating systems; gathers and disposes of refuse; cleans walks; shovels snow; trims hedges; cuts grass; shifts furniture and arranges rooms for various uses; does simple painting, carpentry and the like; does a wide variety of minor maintenance at the handyman level; guards against fire hazards, vandalism, and trespassing.

REQUIREMENTS: Minimum age, 18th birthday, (on or before date of exam); either (1) some satisfactory experience in building cleaning, minor maintenance, or allied work, involving low pressure boiler operation, or (2) a satisfactory equivalent combination of experience and education, considerable knowledge of cleaning methods, materials and equipment; working knowledge of the factors of fire and health safety involved in the care of buildings; working knowledge of simple repair and maintenance methods; ability to fire and operate steam boilers; mechanical ability; thoroughness; reliability; good physical condition; good health and good moral character and habits.

TOWN OF TRUMBULL
INVITATION TO BID
SANITARY SEWER PROJECT

BID # 5795(REBID) **DUE: MAY 20, 2009 at 3:00 PM**

Sealed bids will be received at the office of the Purchasing Agent, Town Hall, Trumbull, CT, on the date and time indicated above and publicly opened for the Sanitary Sewer System Project - Phase IV, Part B, Contract IV - Trumbull Water Pollution Control Authority (WPCA). This contract shall provide sanitary sewer service to approximately 837 houses (approximately 20 miles) and include installation of approximately 24,400 L.F. of 6" PVC sanitary laterals, 86,800 L.F. of 8", 10" and 12" sanitary sewer pipe with manholes and 81.000 L.F. of trench drains, storm drainage and structures.

Contract Documents prepared by the WPCA consist of Information for Bidders, Bid, Agreement, General Conditions, supplemental General Conditions, Contract Drawings, Specifications and Exhibits and may be examined at the WPCA office in Trumbull Town Hall and may be obtained upon payment by check (payable to Town of Trumbull) for two hundred fifty dollars ($250) per. Bidders returning bid documents in good condition within ten (ten) days of bid opening shall be refunded the bid deposit.

All work performed in connection with this project shall comply with the State of Connecticut Prevailing Wage Laws, the Governor's Executive Order No. 3.

A Bid Security (Bid Bond) in the amount of five percent (5%) of the Proposal is required from all bidders. A Performance Bond and Payment Bond, each in the amount of 100 percent (100%) of the Contract price with a corporate surety approved by the Town of Trumbull shall be required. Bidders may not withdraw a bid within a period of ninety (90) days after the actual opening thereof.

A non-mandatory Pre Bid meeting will be held at on May 7, 2009 at 10:00AM in Trumbull Town Hall, 5866 Main Street for interested parties.

The Town reserves the right to reject any or all bids and to waive any requirements, irregularities to technical defects therein when it is deemed to be in the best interest of the Town of Trumbull.

Robert J. Chimini
Purchasing Agent

5-11-01

TOWN OF TRUMBULL
REQUEST FOR QUOTATION (RFQ)

CONSTRUCTION OF SANITARY SEWERS
PHASE IV, PART B, CONTRACT 4

BID NUMBER 5795 (REBID) **DUE: May 20, 2009 3:00 PM**

ADDENDUM 1 (REVISED)

THE PREVIOUS ADDENDUM 1 IS HEREBY DELETED AS FOLLOWS BELOW. ALL ADDENDUMS MUST BE ACKNOWLEDGED AND NOTED ON THE BID RESPONSE FORM.

~~A. The Contractor shall provide a regular log of compaction tests as the work progresses with grade depths at the direction of the Town Engineer. Compaction tests shall pass when they reach 95% compaction or more. The Owner shall pay for all compaction tests that pass. If the results of the compaction fail to reach 95% compaction, the cost for that test shall be paid for by the Contractor and the Contractor shall be responsible for re working the area until the trench compaction achieves a passing grade. The Contractor is responsible for the cost of re testing the failed area.~~

~~B. The cost of providing power for the Pump Station shall be a set price determined by the Power Company and assumed by the Contractor.~~

~~*C. The following item shall be added to the Bid Items and included in the Total Bid Amount:*~~
~~#69. 76,000 CY Trench Excavation – Rock~~
~~1. _____~~
~~2. _____~~

A. Replace BID: Page 8 of 21 and BID: Page 9 of 21 with BID: Page 8 of 21 (rev. 05-12-09) and BID: Page 9 of 21 (rev. 05-12-09) ATTACHED

B. Replace SPECIFICATION Page 2.5-6/7 with SPECIFICATION Page 2.5-6/7 (rev. 05-12-09). ATTACHED

Item	Approx. Quan. & Unit Meas.	Items With Unit Prices Written In Words	Unit Price Dollars & Cents	Extended Total
62.	7765*LF.	18" CPP Storm Drainage (0-10') deep		
63.	300* LF.	24" CPP Storm Drainage (0-10') deep		
64.	14 Ea.	Test Pits		
65.	350 LF.	Stream, River & Culvert Crossing		
66.	13 Ea.	Core Drilling Existing Sanitary Manholes		
67.	38000 CY	Trench Excavation - Earth		
68.	38000 CY	Trench Excavation - Rock		
69.	15150 CY	Borrow		
70.	20000 CY	Gravel Fill		
71.	52800 SY	Temporary Bituminous Repair		
72.	324233SY	Permanent Pavement Repair *includes permanent bituminous concrete overlay*		
73.	50* Ea.	Frame Adjustment		

Item	Approx. Quan. & Unit Meas.	Items With Unit Prices Written In Words	Unit Price Dollars & Cents	Extended Total
74.	23500 LF*	Bituminous Curb (with back up grading)		
75.	1 L.S.	Restoration		
76.	2 Ea.	Project Sign		
77.	85635 L.F.	Television Pipeline Inspection		
78.	1 LS.	Pump Station - Complete		

TOTAL OF BID.....$_____

LUMP SUM PRICE (If applicable).....$_____

Respectfully submitted:

_____
Signature Address

_____ _____
Title Date

_____
License Number (if applicable)

(SEAL - If Bid is by a corporation)

Attest_____

* Quantities were modified by the Town based on previous experiences of new sanitary sewer installations in existing roads. The location and placement of these extra items not indicated on the drawings, if required, will be at the discretion of the Town Road Inspector in the field. Unit Prices will prevail.

Compaction tests will pass when they reach 95% compaction or more as specifications require. Trenches that fail compaction tests will have the fill material removed to an elevation approximately 6 feet above the pipe. Trenches will be compacted and refilled in accordance with the backfill requirements stated. The compaction requirements apply to mainline trenches as well as all lateral trenches.

F. MEASUREMENT AND PAYMENT - No measurements or separate payment will be made for the Work under this section; its costs shall be included in the Prices bid for other items, except that if:

1. "Earth" is encountered below the proposed trench bottom and it's removal is ordered by the Engineer within the payment limits shown on the Contract Drawings.

   Measurement for payment will be taken of the actual number of cubic yards of "earth" excavated as required to set pipe at proper grade as indicated on the Contract Drawings. The Contractor shall notify the Engineer a sufficient time ahead for the Engineer to schedule field measurements if he deems it necessary. If the Contractor fails to give such notice, the Engineer shall presume that the measurements taken at the time he first sees the material in question will give the true quantity of excavation.

   "Earth" in trench excavation will be paid at the Unit Price per Cubic Yard at the depth classification for "Trench Excavation - Earth" as listed in the Bid Schedule. The Unit Price shall include the cost of all materials, equipment, tools and labor incidental to or necessary for completion of the Work. "Borrow" backfill material will be measured and paid for separately under its respective item.

2. "Rock" is encountered and it's removal within the payment limits shown on the Contract Drawings.

   Measurement will be taken of the actual number of cubic yards of "rock" excavated as required to set pipe at proper grade as indicated on the Contract Drawings. The Contractor shall notify the Engineer a sufficient time ahead for the Engineer to schedule field measurements if he deems it necessary. If the Contractor fails to give such notice, the Engineer shall presume that the measurements taken at the time he first sees the material in question will give the true quantity of excavation.

   "Rock" in trench excavation will be paid at the Unit Price per Cubic Yard at the depth classification for "Trench Excavation - Rock" as listed in the Bid Schedule. The Unit Price shall include the cost of all materials, equipment, tools and labor incidental to or necessary for completion of the Work. "Borrow" backfill material will be measured and paid for separately under its respective item.

5-11-01

TOWN OF TRUMBULL
REQUEST FOR QUOTATION (RFQ)

CONSTRUCTION OF SANITARY SEWERS
PHASE IV, PART B, CONTRACT 4

BID NUMBER 5795 (REBID) **DUE: May 20, 2009 3:00 PM**

ADDENDUM 1

THE FOLLOWING ITEMS ARE CHANGES OR ADDITIONS TO REQUEST FOR BID # 5795. ALL ADDENDUMS MUST BE ACKNOWLEDGED AND NOTED ON THE BID RESPONSE FORM.

A. The Contractor shall provide a regular log of compaction tests as the work progresses with grade depths at the direction of the Town Engineer. Compaction tests shall pass when they reach 95% compaction or more. The Owner shall pay for all compaction tests that pass. If the results of the compaction fail to reach 95% compaction, the cost for that test shall be paid for by the Contractor and the Contractor shall be responsible for re-working the area until the trench compaction achieves a passing grade. The Contractor is responsible for the cost of re-testing the failed area.

B. The cost of providing power for the Pump Station shall be a set price determined by the Power Company and assumed by the Contractor.

C. *The following item shall be added to the Bid Items and included in the Total Bid Amount:*

#69. 76,000 CY Trench Excavation – Rock

1. _____
2. _____

5-11-01

TOWN OF TRUMBULL
REQUEST FOR QUOTATION (RFQ)

CONSTRUCTION OF SANITARY SEWERS
PHASE IV, PART B, CONTRACT 4

BID NUMBER 5795 (REBID) DUE: May 20, 2009 3:00 PM

ADDENDUM 2

THE PREVIOUS ADDENDUM 1 IS HEREBY DELETED AS FOLLOWS BELOW. ALL ADDENDUMS MUST BE ACKNOWLEDGED AND NOTED ON THE BID RESPONSE FORM. (Note: Items A & B below are reinstated as an addendum)

A. The Contractor shall provide a regular log of compaction tests as the work progresses with grade depths at the direction of the Town Engineer. Compaction tests shall pass when they reach 95% compaction or more. The Owner shall pay for all compaction tests that pass. If the results of the compaction fail to reach 95% compaction, the cost for that test shall be paid for by the Contractor and the Contractor shall be responsible for re-working the area until the trench compaction achieves a passing grade. The Contractor is responsible for the cost of re-testing the failed area.

B. The cost of providing power for the Pump Station shall be a set price determined by the Power Company and assumed by the Contractor.

C. **Replace** BID: Page 8 of 21 (rev. 05-12-09) and BID: Page 9 of 21 (rev 05-12-09) **with** BID: Page 8 of 21 (rev. 05-14-09) and BID: Page 9 of 21 (rev. 05-14-09) **ATTACHED**

D. **Replace** SPECIFICATION Page 4.3-3/3 **with** SPECIFICATION Page 4.3-3/3 (rev. 05-14-09)." **ATTACHED**

E. **Replace** SPECIFICATION Page 4.4-1/1 **with** SPECIFICATION Page 4.4-1/1 (rev. 05-14-09) **ATTACHED**

Item	Approx. Quan. & Unit Meas.	Items With Unit Prices Written In Words	Unit Price Dollars & Cents	Extended Total
62.	7765*LF.	18" CPP Storm Drainage (0-10') deep		
63.	300* LF.	24" CPP Storm Drainage (0-10') deep		
64.	14 Ea.	Test Pits		
65.	350 LF.	Stream, River & Culvert Crossing		
66.	13 Ea.	Core Drilling Existing Sanitary Manholes		
67.	38000 CY	Trench Excavation - Earth		
68.	38000 CY	Trench Excavation - Rock		
69.	15150 CY	Borrow		
70.	20000 CY	Gravel Fill		
71.	52800 SY	Temporary Bituminous Repair		
72.	324233SY	Permanent Pavement Repair *includes permanent bituminous concrete overlay*		
73.	302600 SY	Milling		

Item	Approx. Quan. & Unit Meas.		Items With Unit Prices Written In Words	Unit Price Dollars & Cents	Extended Total
74.	50*	Ea.	Frame Adjustment		
75.	23500	LF*	Bituminous Curb (with back up grading)		
76.	1	L.S.	Restoration		
77.	2	Ea.	Project Sign		
78.	85635	L.F.	Television Pipeline Inspection		
79.	1	LS.	Pump Station - Complete		

TOTAL OF BID.....$_____

LUMP SUM PRICE (If applicable).....$_____

Respectfully submitted:

_____
Signature Address

_____ _____
Title Date

_____
License Number (if applicable)

(SEAL - If Bid is by a corporation)

Attest_____

* Quantities were modified by the Town based on previous experiences of new sanitary sewer installations in existing roads. The location and placement of these extra items not indicated on the drawings, if required, will be at the discretion of the Town Road Inspector in the field. Unit Prices will prevail.

TRENCH SETTLEMENT: A minimum of nine (9) months settlement time shall elapse between installing temporary pavement and the final pavement. This applies to the date of the last lateral trench backfilled.

The maximum pay width shall be as indicated on the Contract Drawings or as specifically ordered by the Engineer.

F. Adjustment of frames of existing Storm Drainage Structures for final paving including removing existing pavement from a manhole or catch basin frame and cover to perform the Work will be paid at the Unit Price per frame under the item "Frame Adjustment" as listed in the Bid Schedule.

BITUMINOUS CONCRETE SURFACE OVERLAY

A. DESCRIPTION - The Work under this section shall consist of furnishing and placing a bituminous concrete surface overlay at the locations ordered by the Engineer for the purpose of final repair of roadway surfaces to provide a smooth even wearing surface to the thickness and width indicated on the Contract Drawings, or as directed by the Engineer. Prior to the surface overlay, the road shall be scarified and milled accordingly to be brought to Town Standards.

B. MATERIALS - Materials for the bituminous concrete mixture, sources of supply, formula for mix, mix tolerances, approval of mix formula and the control of the mixture shall conform to the requirements of Article M.04.01 for Class 1 or Class 2 as required by the Connecticut D.O.T. Standard Specifications.

C. CONSTRUCTION METHOD - Method of Construction for the "Bituminous Concrete Surface Overlay" shall be Curb to Curb 1-1/2 inch Class 2 bituminous as per Standard Connecticut D.O.T. Specifications. The road is to be scarified and / or milled as directed by the Engineer to prrovide the proper parabolic cross section and adhesion. Construction Methods for all Work shall be performed with the proper equipment, tools, machinery; including those used at the plant; and shall conform to Article 4.02.03 of the Standard Specifications.

D. MEASUREMENT AND PAYMENT - This Work shall be paid for at the Unit Price per Square Yard for "Bituminous Concrete Surface Overlay", completed and accepted in place, which price shall include all materials, equipment, tools, and labor incidental thereto. It shall be measured in the hauling vehicles on scales or by automatic recording equipment furnished by and at the expense of the Contractor. The scales or automatic recording equipment shall be of a type satisfactory to the Engineer and shall be sealed. The total weight will be the summation of the weight slips of bituminous concrete actually incorporated in the Work included under this section.

The Unit Price for milling of the road will be based on two passes, a total of fourteen (14) feet from the curb, which will b paid at the Unit Price of "Milling" as listed in the Bid Schedule and paid at the Unit Price of Square Yards (S.Y.)

E. MANHOLE FRAMES & COVERS - Seats of all round manhole frames and covers should be installed level to the surface overlay providing a continuous even surface. Operators of motor vehicles shall be free from jolting or noticeable impact when wheel loads come in contact with frames and covers.

TABLE A

Phase 4, Part B, North Nichols Area Sewer Project -- Trumbull, CT
Quantity Comparison

Item	Description	Units	As Bid Unit Price	As Bid Quantity	Newly Measured Quantity	As Bid Extended Cost	New Unit Price	Newly Measured Extended Cost	Increase (Decrease)	Percent Cost Difference	Comments
1	MAINTENANCE & PROTECTION OF TRAFFIC	LS	$900,000.00	1	1	$ 900,000.00		$ 900,000.00	$ -	0.0%	Lump sum item, used bid info.
2	TRAFFIC MEN	EST.	$500,000.00	1	1	$ 500,000.00		$ 800,000.00	$ 300,000.00	60.0%	Estimated to project completion
3	CLEARING & GRUBBING	LS	$300,000.00	1	1	$ 300,000.00		$ 300,000.00	$ -	0.0%	Lump sum item, used bid info.
4	WATER POLLUTION CONTROL (SOIL EROSION)	LS	$150,000.00	1	1	$ 150,000.00		$ 150,000.00	$ -	0.0%	Lump sum item, used bid info.
5	TEMPORARY SEDIMENT CONTROL MEASURES	LS	$150,000.00	1	1	$ 150,000.00		$ 150,000.00	$ -	0.0%	Lump sum item, used bid info.
6	2" FORCE MAIN	LF	$40.00	480	570	$ 19,200.00		$ 22,800.00	$ 3,600.00	18.8%	
7	4" FORCE MAIN	LF	$50.00	560	640	$ 28,000.00		$ 32,000.00	$ 4,000.00	14.3%	
8	6" PVC SAN. LATERALS	LF	$60.00	24,360	23,101	$ 1,461,600.00		$ 1,386,060.00	$ (75,540.00)	-5.2%	
9	8" PVC SS 0-10'	LF	$71.50	26,900	37,198	$ 1,923,350.00		$ 2,659,657.00	$ 736,307.00	38.3%	
10	8" DIP SS 0-10'	LF	$85.00	580	1,480	$ 49,300.00		$ 125,800.00	$ 76,500.00	155.2%	
11	8" PVC SS 10-15'	LF	$71.50	31,917	23,278	$ 2,282,065.50		$ 1,664,377.00	$ (617,688.50)	-27.1%	
12	8" DIP SS 10-15'	LF	$86.00	1,070	977	$ 92,020.00		$ 84,022.00	$ (7,998.00)	-8.7%	
13	8" PVC SS 15-20'	LF	$125.00	8,924	6,179	$ 1,115,500.00		$ 772,375.00	$ (343,125.00)	-30.8%	
NA*	8" DIP SS 15-20'	LF	0	0	145	$ -		$ 21,750.00	$ 21,750.00	100.0%	$150/LF; Sheet P-121
14	8" PVC SS 20-25'	LF	$250.00	1,875	1,472	$ 468,750.00		$ 368,000.00	$ (100,750.00)	-21.5%	
NA*	8" DIP SS 20-25'	LF	0	0	25	$ -		$ 7,500.00	$ 7,500.00	100.0%	$300/LF; Sheet P-121
15	8" PVC SS 25-30'	LF	$250.00	125	74	$ 31,250.00		$ 18,500.00	$ (12,750.00)	-40.8%	
16	10" PVC SS 0-10'	LF	$181.00	1,095	1,794	$ 198,195.00		$ 324,714.00	$ 126,519.00	63.8%	
NA*	10" DIP SS 0-10'	LF	0	0	25	$ -		$ 4,525.00	$ 4,525.00	100.0%	$181/LF; Sheets P-103 (15) & P-107 (10)
17	10" PVC SS 10-15'	LF	$181.00	2,300	2,189	$ 416,300.00		$ 396,209.00	$ (20,091.00)	-4.8%	
18	10" DIP SS 10-15'	LF	$181.00	200	480	$ 36,200.00		$ 86,880.00	$ 50,680.00	140.0%	
19	10" PVC SS 15-20'	LF	$181.00	2,135	2,571	$ 386,435.00		$ 465,351.00	$ 78,916.00	20.4%	
20	10" DIP SS 15-20'	LF	$181.00	830	641	$ 150,230.00		$ 116,021.00	$ (34,209.00)	-22.8%	
21	10" PVC SS 20-25'	LF	$181.00	2,755	2,659	$ 498,655.00		$ 481,279.00	$ (17,376.00)	-3.5%	
22	10" DIP SS 20-25'	LF	$181.00	445	330	$ 80,545.00		$ 59,730.00	$ (20,815.00)	-25.8%	
23	10" PVC SS 25-30'	LF	$181.00	1,075	501	$ 194,575.00		$ 90,681.00	$ (103,894.00)	-53.4%	
24	12" PVC SS 0-10'	LF	$80.00	628	663	$ 50,240.00		$ 53,040.00	$ 2,800.00	5.6%	
25	12" DIP SS 0-10'	LF	$100.00	30	190	$ 3,000.00		$ 19,000.00	$ 16,000.00	533.3%	
26	12" PVC SS 10-15'	LF	$140.00	1,754	1,600	$ 245,560.00		$ 224,000.00	$ (21,560.00)	-8.8%	
27	12" DIP SS 10-15'	LF	$110.00	76	133	$ 8,360.00		$ 14,630.00	$ 6,270.00	75.0%	
28	12" PVC SS 15-20'	LF	$150.00	881	678	$ 132,150.00		$ 101,700.00	$ (30,450.00)	-23.0%	
29	12" DIP SS 15-20'	LF	$225.00	40	138	$ 9,000.00		$ 31,050.00	$ 22,050.00	245.0%	
30	8" PVC TRENCH DRAIN	LF	$25.00	35,650	35,650	$ 891,250.00		$ 891,250.00	$ -	0.0%	None shown, used bid info.
31	TRENCH DAM	EA	$0.01	20	20	$ 0.20		$ 0.20	$ -	0.0%	Item pennyed, used bid info.
32	48" SMH 0-10'	EA	$2,400.00	174	225	$ 417,600.00		$ 540,000.00	$ 122,400.00	29.3%	
33	48" SMH 10-15'	EA	$2,400.00	154	108	$ 369,600.00		$ 259,200.00	$ (110,400.00)	-29.9%	
34	48" SMH 15-20'	EA	$4,500.00	55	31	$ 247,500.00		$ 139,500.00	$ (108,000.00)	-43.6%	
35	48" SMH 20-25'	EA	$5,500.00	13	11	$ 71,500.00		$ 60,500.00	$ (11,000.00)	-15.4%	
36	48" SMH 25-30'	EA	$7,000.00	3	1	$ 21,000.00		$ 7,000.00	$ (14,000.00)	-66.7%	Sheet P-40
NA*	48" SAN. DROP MH 0-10'	EA	$0.00	0	4	$ -	$ 3,000.00	$ 12,000.00	$ 12,000.00	100.0%	$3,000/EA; Sheets P-46 (1), P-44 (1), & P-25 (2)

Table A 5 of 10

TABLE A
Phase 4, Part B, North Nichols Area Sewer Project -- Trumbull, CT
Quantity Comparison

Item	Description	Units	As Bid Unit Price	As Bid Quantity	Newly Measured Quantity	As Bid Extended Cost	New Unit Price	Newly Measured Extended Cost	Increase (Decrease)	Percent Cost Difference	Comments
62	18" CPP STORM DRAINAGE 0-10'	LF	$0.01	7,765	7,765	$ 77.65		$ 77.65	$ -	0.0%	Item pennyed, used bid info.
63	24" CPP STORM DRAINAGE 0-10'	LF	$0.01	300	300	$ 3.00		$ 3.00	$ -	0.0%	Item pennyed, used bid info.
64	TEST PITS	EA	$500.00	14	14	$ 7,000.00		$ 7,000.00	$ -	0.0%	None shown, used bid info.
65	STREAM, RIVER & CULVERT CROSSING	LF	$200.00	350	225	$ 70,000.00		$ 45,000.00	$ (25,000.00)	-35.7%	
66	CORE EXISTING SANITARY MANHOLES	EA	$1,200.00	13	13	$ 15,600.00		$ 15,600.00	$ -	0.0%	Used bid info.
67	TRENCH EXCAVATION - EARTH	CY	$0.01	38,000	38,000	$ 380.00		$ 380.00	$ -	0.0%	Item pennyed, used bid info.
68	ROCK	CY	$100.00	38,000	61,767	$ 3,800,000.00		$ 6,176,700.00	$ 2,376,700.00	62.5%	Assumes rock at 6 ft deep
69	BORROW	CY	$0.01	15,150	15,150	$ 151.50		$ 151.50	$ -	0.0%	Item pennyed, used bid info.
70	GRAVEL FILL	CY	$0.01	20,000	20,000	$ 200.00		$ 200.00	$ -	0.0%	Item pennyed, used bid info.
71	TEMP PAVE REPAIR	SY	$24.00	62,800	80,518	$ 1,267,200.00		$ 1,932,436.89	$ 665,236.89	52.5%	
72	PERM PAVE REPAIR	SY	$10.00	324,233	275,941	$ 3,242,330.00		$ 2,759,408.98	$ (482,921.02)	-14.9%	
73	MILLING	SY	$2.00	302,600	302,600	$ 605,200.00		$ 605,200.00	$ -	0.0%	None shown, used bid info.
74	FRAME ADJUSTMENT	EA	$400.00	50	50	$ 20,000.00		$ 20,000.00	$ -	0.0%	None shown, used bid info.
75	BITUMINOUS CURB	LF	$6.50	23,500	23,500	$ 152,750.00		$ 152,750.00	$ -	0.0%	None shown, used bid info.
76	RESTORATION	LS	$350,000.00	1	1	$ 350,000.00		$ 350,000.00	$ -	0.0%	Lump sum item, used bid info.
77	PROJECT SIGN	EA	$0.01	2	2	$ 0.02		$ 0.02	$ -	0.0%	Item pennyed, used bid info.
78	TELEVISION PIPELINE INSPECTION	LF	$2.00	85,635	85,635	$ 171,270.00		$ 171,270.00	$ -	0.0%	None shown, used bid info.
	COMPLETE	LS	$400,000.00	1	1	$ 400,000.00		$ 400,000.00	$ -	0.0%	Lump sum item, used bid info.
						$ 24,902,073.29		$ 27,204,429.66	$ 2,302,356.37	9.2%	

NA* - Item not in original bid estimate, unit price used in comment column

S-11-01

5-11-01

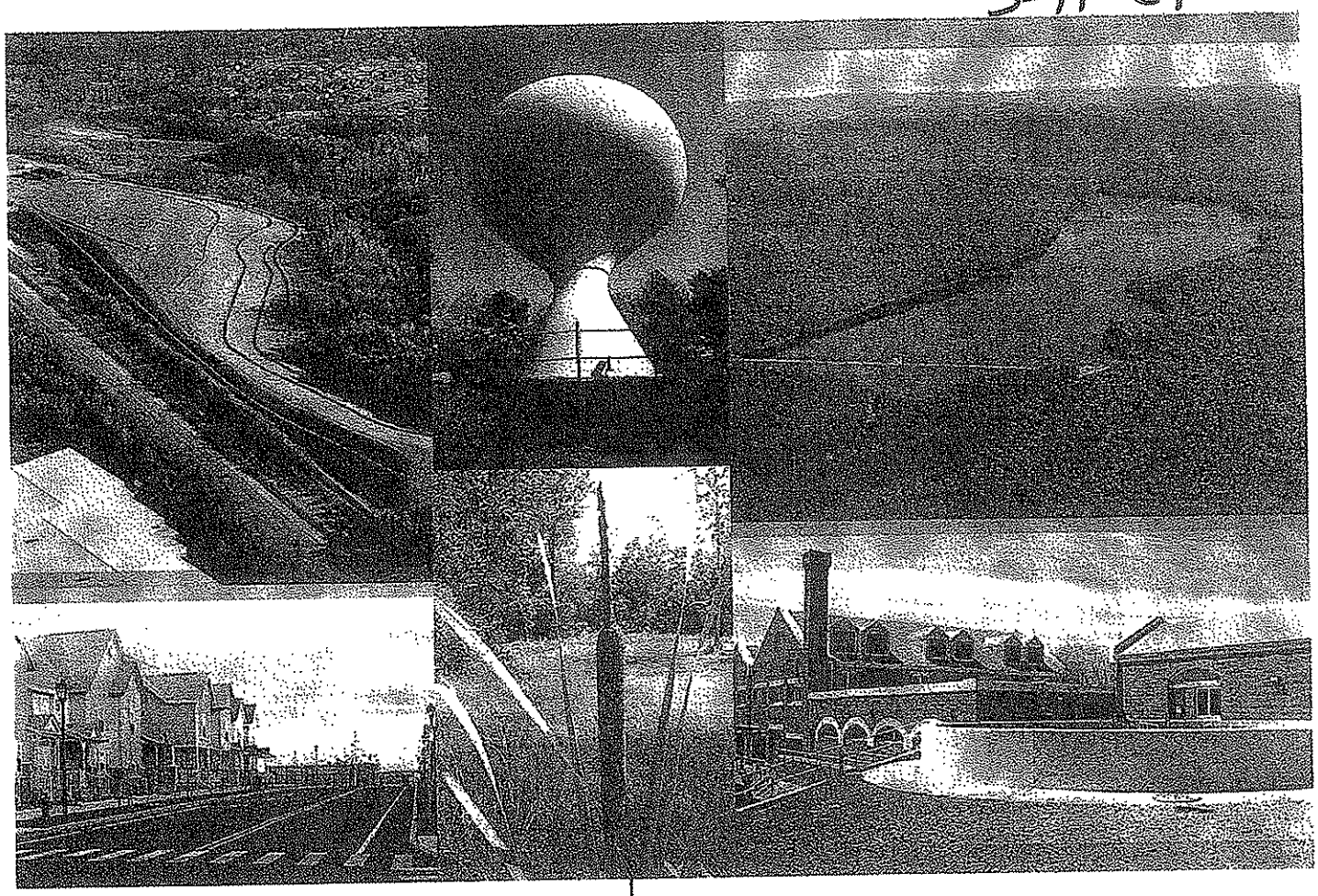

Tighe&Bond

Phase 4 - Part B, Contract IV

Permanent Pavement Evaluation Report

DRAFT

Prepared For:

Town of Trumbull

January 31, 2011

TABLE OF CONTENTS

Town of Trumbull

Permanent Pavement Evaluation Report

Phase 4 – Part B, Contact IV

January 31, 2011

SUMMARY 1
BACKGROUND 1
PAVEMENT CORE AND BORING DATA 4
TRAFFIC DATA 5
FIELD OBSERVATIONS 5
ALTERNATIVES 6
COST ANALYSIS 7

Appendix A Soil Borings Logs

Appendix B Pavement Design Calculations

DRAFT

Town of Trumbull

Permanent Pavement Evaluation Report

Phase 4 – Part B, Contract IV

January 31, 2011

Summary

Tighe & Bond prepared recommendations for the evaluation of pavement rehabilitation options for of the Phase 4, Part B Contract IV North Nichols Area Sewer Project roadways. The project limits are shown in **Figure 1** and incorporate 91,300 linear feet of roadways. Our study included an evaluation of the existing pavement, the types of pavement deficiencies observed, potential contributing factors to deficiencies, and possible rehabilitation strategies and opinions of probable cost for the recommended options.

Background

A typical pavement section for roadways consists of three main components. Each of these components contributes to the satisfactory functioning of the pavement through its design lifetime. The first and most obvious component is the bituminous concrete layer. This can vary in thickness and mix design, and is often installed in more than one layer course. The second component of a typical pavement section is the subbase material directly below the bituminous concrete. This is generally a gravelly material or a coarse aggregate of gravel and broken stone. Below the subbase is the natural subgrade material that comprises the third and final part of the pavement section.

The depth of each of these layers varies depending on the traffic each roadway supports. The depth of these increases as the amount of traffic of the roadway increases.

Most of the roads within this project are classified as local residential streets. Huntington Turnpike and Shelton Road are minor arterials and Merritt Boulevard is a collector roadway. **Table 1** shows the roadway classification, Average Daily Traffic (ADT) and roadway lengths and pavement area for each roadway.

Table 1 – Contract 4 Roadway Characteristics

Street Name	Roadway Classification	ADT	Total Length (LF)	Total Area (SF)	Avg. Width (LF)
Baldwin Avenue	Local	100	450	7,456	17
Beverly Road	Local	200	922	21,521	23
Booth Hill Road	Collector	3100	10,324	261,900	25
Briar Hill Drive	Local	100	486	14,344	29
Briarwoods Terrace	Local	200	1,852	50,676	27
Butternut Lane	Local	500	713	22,216	31
Carriage Drive	Local	100	706	23,444	33

Street Name	Roadway Classification	ADT	Total Length (LF)	Total Area (SF)	Avg. Width (LF)
Carrousel Drive	Local	100	1,175	37,539	32
Civkin Drive	Local	100	576	20,216	35
Columbine Drive	Local	900	3,617	109,631	30
Copper Kettle Road	Local	200	1,754	54,893	31
Dogwood Lane	Local	200	1,709	54,827	32
East Lake Road	Local	50	375	12,363	33
Erwin Street	Local	200	1,134	30,984	27
Ethel Road	Local	200	609	21,438	35
Fern Circle	Local	100	548	10,669	19
Garnet Place	Local	200	393	11,421	29
Garnet Road	Local	200	1,015	30,103	30
Gingerbrook Drive	Local	100	494	14,893	30
Golden Hill	Local	1700	3,223	102,183	32
Green Ridge Road	Local	200	1,451	46,564	32
Heartwood Lane	Local	50	700	23,559	34
Hillandale Terrace	Local	200	1,230	38,672	31
Hilltop Circle	Local	500	753	25,065	33
Hilltop Drive	Local	150	888	24,235	27
Hunters Lane	Local	100	755	26,233	35
Jerusalem Hill	Local	200	1,382	25,817	19
Kenwood Lane	Local	100	791	24,517	31
Kingsbury Drive	Local	200	1,823	57,799	32
Lobsterback Road	Local	200	1,809	58,898	33
Long View Road	Local	100	990	32,707	33
Macdonald Road	Local	100	1,253	37,939	30
Mischa Hill Road	Local	300	1,481	32,006	22
North Street	Local	500	2,710	80,772	30
North Stowe Place	Local	500	1,518	31,263	21
Old Green Road	Local	200	1,404	30,543	22
Oriole Lane	Local	200	832	25,067	30
Over Hill Drive	Local	100	484	16,817	35
Pachaug Road	Local	100	996	30,101	30
Partridge Lane	Local	200	1,289	43,518	34
Powder Mill Lane	Local	200	874	26,862	31
Primrose Drive	Local	1700	2,390	71,368	30
Red Fox Lane	Local	200	1,675	53,015	32

Street Name	Roadway Classification	ADT	Total Length (LF)	Total Area (SF)	Avg. Width (LF)
Rennison Road	Local	100	1,088	29,386	27
Round Ridge Trail	Local	100	894	27,080	30
Saybrook Road	Local	100	782	24,567	31
Skyview Drive	Local	300	2,279	70,360	31
St. Johns Drive	Local	100	1,915	60,648	32
Sweetbriar Road	Local	100	699	23,950	34
Tamarack Circle	Local	100	552	18,251	33
Teeter Rock Road	Local	800	3,060	91,929	30
Tory Lane	Local	200	390	11,971	31
Turkey Meadow Road	Local	150	1,735	51,328	30
Twin Circle Drive	Local	100	875	31,474	36
Wheeler Drive	Local	400	565	16,477	29
Wisteria Drive	Local	200	713	21,439	30
Woodcrest Avenue	Local	400	2,510	73,113	29
		Subtotal Local Roads	**79,613**	**2,328,027**	**30**
Huntington Road	Minor Arterial				
Huntington Turnpike Rte. 108	Minor Arterial	5300-9400	5,451	147,177	27
Merritt Blvd.	Collector	6600	993	43,272	44
Shelton Road	Minor Arterial		5,229	139,837	27
		Subtotal Major Roads	**11,672**	**330,286**	
		Total	**91,285**	**2,658,313**	

The construction documents for Contract IV include several permanent paving details. For Town streets, the document shows is a permanent pavement overlay detail that consists of a 1.5" wearing course of Class 2 bituminous concrete for the full width of each street. The detail also includes milling a 6' width at each gutter as required at the direction of the Town Engineer prior to the installation of the overlay. See **Figure 2**.

Based on the Town subdivision regulations, the typical Town roadway pavement section is comprised of 1.5" Class wearing course 2 bituminous concrete, 1.5" binder course Class 1 bituminous concrete and a 12" subbase. **Figure 2** shows this typical section.

There is a permanent pavement repair detail for use on state highways, which is applicable for Huntington Turnpike (Connecticut Route 108). This detail includes 3" Class 1 bituminous concrete (placed in 2 courses) over a 7" processed aggregate base course.

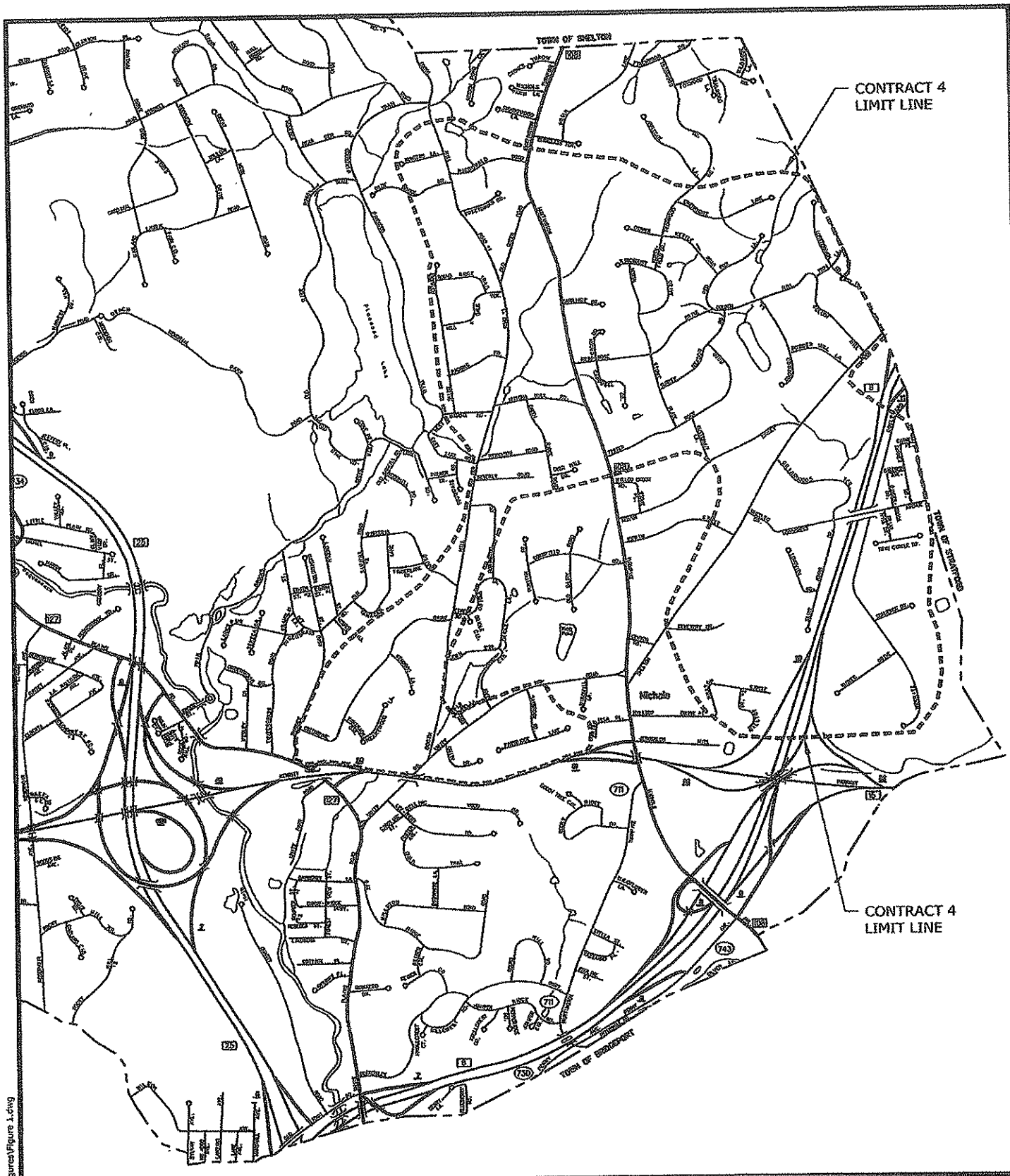

Town of Trumbull, Connecticut

Sewers - Contract 4

FIGURE 1

PROJECT LOCATION MAP

NORTH

1" = 2000'

Tighe & Bond

www.tighebond.com

Tighe & Bond, Inc. J:\T\T02011\REPORT\Figures\Figure 1.dwg

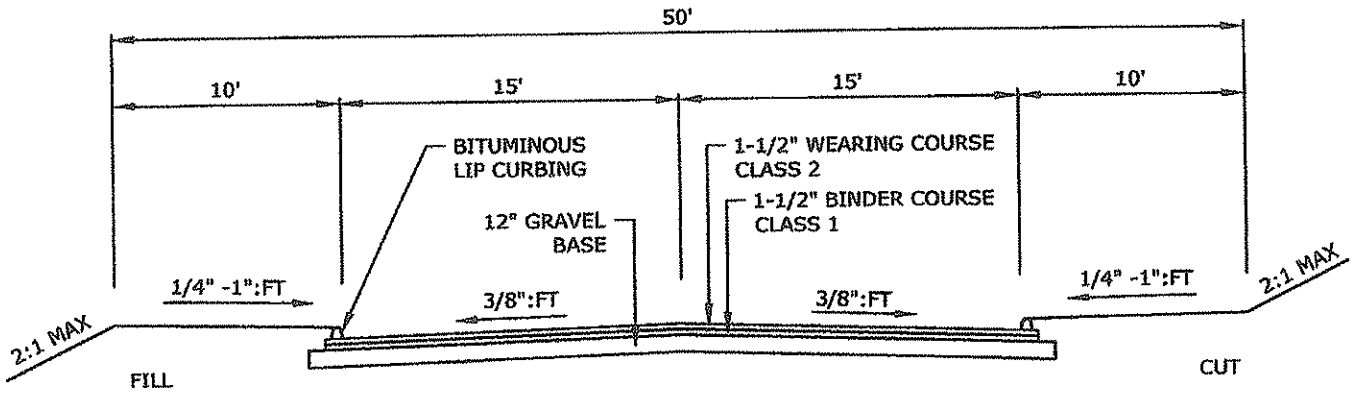

TYPICAL TOWN ROADWAY SECTION

NO SCALE

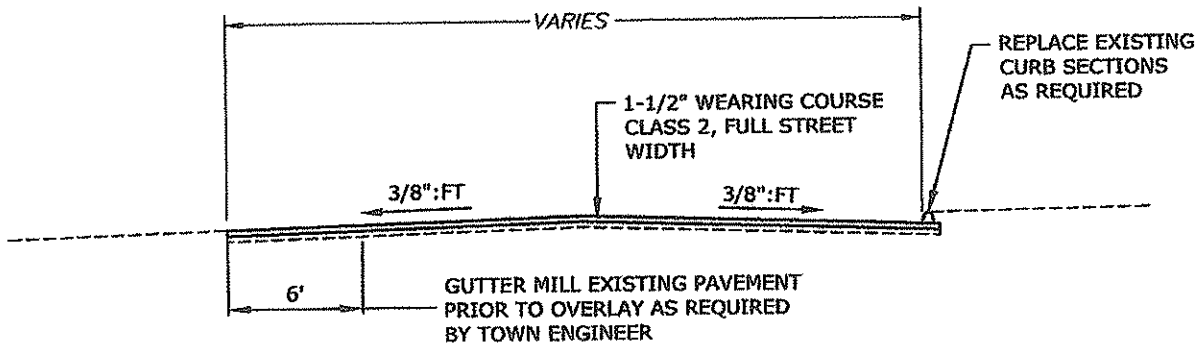

TYPICAL PAVEMENT OVERLAY FOR SEWER CONTRACTS

NO SCALE

Town of Trumbull, Connecticut

Sewers - Contract 4

TYPICAL ROADWAY SECTIONS

FIGURE 2

Tighe & Bond

Tighe & Bond, Inc. J:\V\T02201\REPORT\Figures\Figure 2.dwg

We have reviewed the construction plans for work on Connecticut Route 108 (ConnDOT Project No. 144-151) in 1985. The plans include a full-depth pavement detail that has a ¾" Class 14 bituminous concrete wearing surface over a 3" Class 1 bituminous concrete binder course on top of a 6" Class 4 bituminous concrete base course. The bituminous concrete courses are supported by a 10" subbase. The plans also include an overlay pavement detail that has a ¾" Class 14 wearing surface over a 1.5" Class 1 bituminous concrete base course.

The pavement section for Shelton Road, which was formerly a state highway, has a 4" Class 1 bituminous concrete (2 course) over an 8" concrete base course followed by a 10" gravel subbase. See **Figure 3**.

Pavement Core And Boring Data

New England Borings pavement cores and soil borings conducted at 40 locations distributed throughout the project on December 17, 2010. Tighe & Bond witnessed the pavement corings and soil borings. **Figure 4** shows the boring locations. **Table 2** summarizes the results of this investigation and **Appendix A** includes the soil boring logs. We used this data to develop and recommend pavement rehabilitation strategies for the proposed pavement program.

New England Borings used a truck mounted auger rig for the soil borings. Once the auger drilled through the pavement section, it was removed so that a pavement depth could be recorded. The soil borings were advanced below the open hole using a split spoon sampler. The split spoon samples were advanced by a 140 lb hammer falling 2.5 feet and blow counts were recorded.

Table 2 – Soil Boring Summary

Boring	Road	Bituminous Depth (in)	Base Depth (in)	Bituminous / Base Comments
B1	Columbine Dr	2.5	16	Fine - Coarse sand w/ gravel
B2	Tamatack Cr	3.5	12	New Sanitary trench cushion sand
B3	Heartwood Ln	-	-	Not Sampled
B4	Columbine Dr	5	11	Fine - Med sand w/ little gravel
B5	Kenwood Ln	1.5	6	Fine - Med sand w/ little gravel
B6	Booth Hill Rd	4	12	Fine Sand w/ gravel
B7	Booth Hill Rd	4	12	Fine - Med sand w/ little gravel
B8	Wisteria Dr	4	14	Coarse sand w/ gravel
B9	Booth Hill Rd	7	9	Coasre sand w/ gravel
B10	Oriole Ln	2.5	10	Med -Coarse sand w/ gravel
B11	Partridge Ln	4	6	Fine sand w/ gravel
B12	Beverly Rd	4	6	Bit. has a lot of fines, fine sand w/ gravel
B13	Rennison Rd	3	12	Fine - Coarse sand w/ gravel
B14	Green Ridge Rd	4.5	14	Fine - Coarse sand w/ gravel
B15	Longview Dr	3	5	Fine - Med sand w/ gravel
B16	Hilltop Cr	4	6	Fine - Coarse sand w/ gravel
B17	St. Johns Dr	4	8	Fine - Med sand w/ gravel
B18	St. Johns Dr	4.5	10	Fine - Med sand w/ gravel
B19	Woodcrest Ave	7	16	Fine - Med sand w/ gravel

Boring	Road	Bituminous Depth (in)	Base Depth (in)	Bituminous / Base Comments
B20	Briarwoods Tr	4	12	Fine - Coarse sand w/ gravel
B21	Twin Circle	3.5	15.5	Fine - Med sand w/ gravel
B22	Briar Hill Dr	6.5	13.5	Fine - Med sand w/ gravel
B23	Gingerbrook Dr	6	6	Fine - Med sand w/ gravel
B24	Garnet Rd	-	-	Not Sampled
B25	Garnet Pl	5	7	Fine - Coarse sand w/ gravel
B26	Lobsterback Rd	4	20	Fine - Med sand w/ gravel
B27	Golden Hill	4.5	7.5	Fine - Coarse sand w/ gravel
B28	Teeter Rock Rd	4.5	7.5	Fine - Med sand w/ gravel (rock at 24")
B29	Teeter Rock Rd	5	13	Fine sand w/ gravel
B30	Turkey Meadow Rd	4	20	Fine - Coarse sand w/ 3/8"gravel
B31	Primrose Dr	4	12	Fine - Coarse sand w/ gravel
B32	North Stowe Pl	4.5	7.5	Fine - Coarse sand w/ gravel
B33	Carousel Dr	5	7	Fine - Coarse sand w/ gravel
B34	Civkin Dr	5	7	Fine - Coarse sand w/ gravel
B35	Carriage Dr	2.5	5.5	Fine - Med Sand w/ gravel
B36	Copper Kettle Rd	3.5	6	Fine sand w/ gravel
B37	Red Fox Ln	3.5	6	Fine - Med sand w/ gravel
B38	Kingsbury Dr	3.5	6	Fine sand w/ gravel
B39	Primrose Dr	7	12	Fine - Coarse sand w/ gravel
B40	North Stowe Pl	4	6	Fine - Med sand w/ gravel
B41	Erwin St	5.5	7.5	Fine - Coarse sand w/ gravel

Traffic Data

Traffic data was obtained from the Connecticut Department of Transportation for Huntington Turnpike and Booth Hill Road. The 2007 ADT on Huntington Turnpike was 5300 at the northerly section, 7,900 at the middle point and 9,400 vehicles per day at the southerly limit of the roadway. The 2007 ADT on Booth Hill Road was 3100 vehicles per day.

Traffic data for the remaining local roads were estimated using the Institute of Transportation Engineers Trip Generation 8th Edition for single family detached housing.

Field Observations

Tighe & Bond field personnel have been on the project since July 2010. During that time they have observed the pavement removal and trench excavation for the sanitary sewer installation on many of the roads. They also observed the trench and roadway conditions on those roadways that sewers were installed before July 2010.

Prior to July 2010, the sewer contractor was not saw-cutting the bituminous concrete pavement prior to trench excavation.

The contractor would remove the pavement log using the excavator to rip through the pavement and pull sections up from the trench. This practice caused disturbance of greater amount of existing pavement than what was required for the trenching. This also separates the two courses of pavement from each other and breaks the bond with the subbase. This

STEP 1: INSTALL 6" SUBBASE, 7" CLASS 4 BASE COURSE, & 4" CLASS 4 TOP COURSE.

STEP 2: AFTER 6 MONTHS, MILL FULL ROADWAY WIDTH 2" DEPTH, INSTALL PAVEMENT GRID OVER TRENCH, PAVE FULL ROAD WIDTH WITH 2" OF CLASS 1.

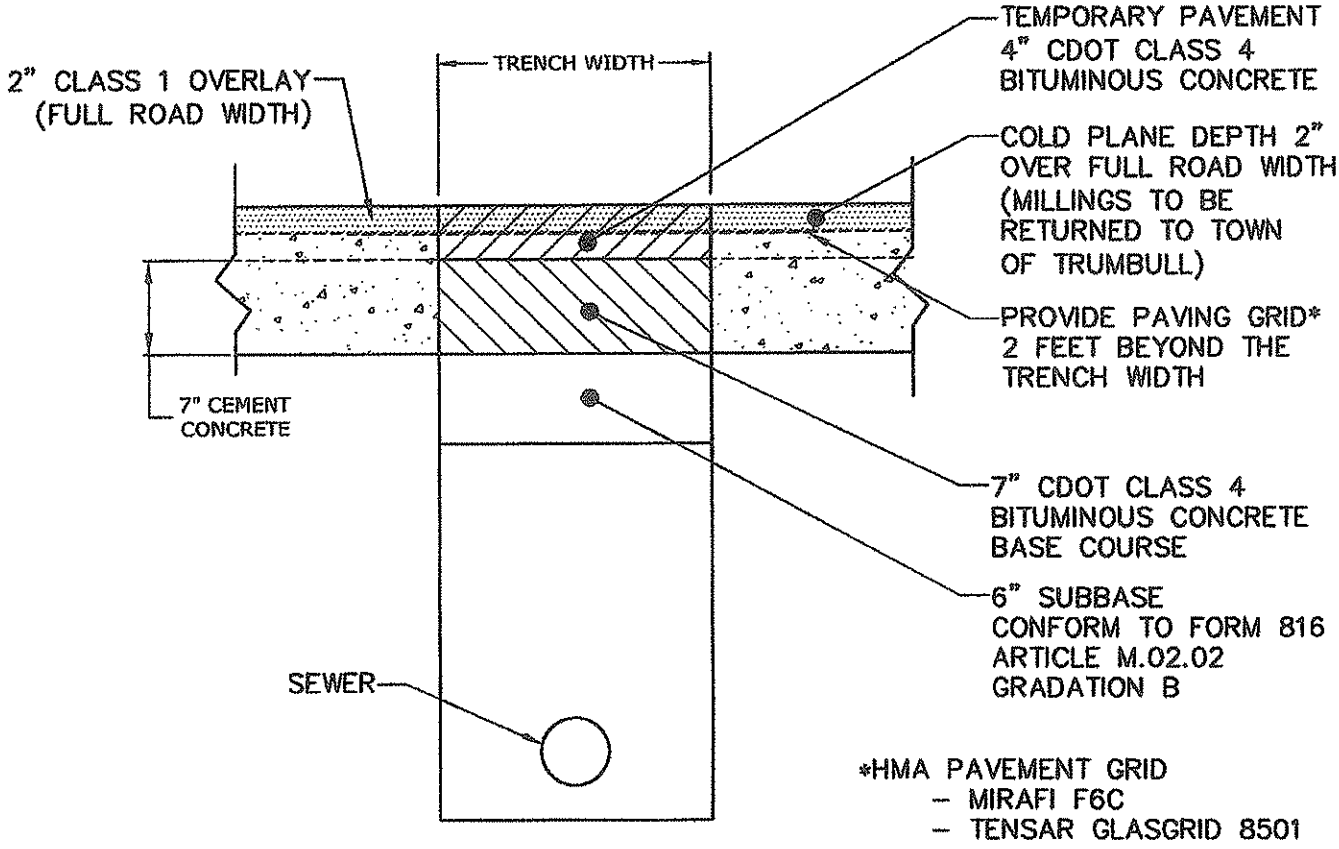

PAVEMENT REPAIR SECTION
FROM MH SH-14 (14+30±) TO MH SH-20 (50+00±)

NO SCALE

NOTES:
1. IN AREAS WHERE CONCRETE SUBBASE IS PRESENT, THE ABOVE PAVEMENT SECTION SHALL BE USED AND INCLUDE THE MAIN LINE SEWER TRENCH AND THE LATERAL TRENCH.
2. IN AREAS WHERE CONCRETE SUBBASE IS NOT PRESENT, THE PAVEMENT SECTION SHALL CONFORM TO THE TEMPORARY PAVEMENT DETAIL AS SHOWN ON SHEET D-1.

Contract 4 - North Nichols Sewers

Trumbull, Connecticut

SHELTON ROAD TRENCH REPAIR

FIGURE 3

Tighe & Bond

Tighe & Bond, Inc. J:\TY0201\REPORT\Figures\Figure 5.dwg

DOGWOOD LANE
DOGWOOD POND
MISCHA HILL ROAD
HERRITT BOULEVARD

practice also leaves a void space under portions of the remaining pavement. The Contractor replaced the removed pavement, with temporary pavement beyond of the trench contract pay limits, at his own expense.

This practice also affects the installation of the permanent pavement courses since the actual trench limits will not be visible to allow saw cutting an additional foot beyond the trench so that the pavement section overlaps the edge of the trenches required by the contract documents.

Alternatives

We used the AASHTO Pavement Design Guide, 1993 version, to evaluate appropriate pavement options for the work. The pavement structural design is based on traffic repetitions (Equivalent Single Axle Loads (ESALs) accumulated over the design life of the pavement. The following parameters were used in the pavement analysis:

Design Period – 20 Years
Traffic Growth Per year – 2%
Soil Resilient Modulus (Mr) – 10,000
Reliability – 90%

Pavement design calculations are included in **Appendix B.**

The following pavement alternatives were evaluated for feasibility for the rehabilitation of the various project roadways.

1. **Bituminous Concrete Resurfacing** – This alternative includes a designed bituminous concrete overlay but does not address the deterioration of the underlying pavement and may reduce the minimum curb reveal required for drainage.

2. **Milling and Bituminous Concrete Overlay**– This alternative includes fine milling of 2 to 3" of bituminous concrete pavement and the placement of a designed bituminous concrete overlay.

3. **Reclamation and Bituminous Concrete Pavement Replacement** - This option entails the reclamation of the entire existing bituminous concrete layer along with some subgrade material to a depth of approximately 8 – 10 inches. This reclamation operation would break and grind the existing pavement into small particles and thoroughly mix it with the subbase, increasing the proportion of coarse material while still providing a compacted roadway subbase that meets specifications. A new two course – 3" thick bituminous concrete pavement section on the compacted subbase.

DRAFT

Cost Analysis

Pavement reconstruction is a major undertaking with major cost implications. Pavements should be designed with life cycle costs in mind and should be inventoried, analyzed and designed using AASHTO criteria for thicknesses of pavement structure, traffic loading, material relationships and soil support. The only economical way to maintain a roadway network is to increase the life cycle between major reconstructions so that the present worth of a long series of expenditures is minimized. The key to achieving that result is to keep good pavement goods and to delay making significant repairs until they are required. Pavement life cycle is illustrated in Figure 5 showing the way pavements generally deteriorate.

The current Contract IV plans show placing a 1.5" overlay on the full street width for the roadways within the project limits. The Mark IV Construction Co. bid cost for paving items was approximately $4,125,000, which included milling, bituminous concrete curbs, 1.5" bituminous concrete overlay, maintenance and protection of traffic and traffic men. Depending on the condition of these pavement this can be compared to a band aid approach to pavement management. If the roadways are in the fair to poor range there will be significant reflective cracking in the future and this approach ignores life cycle costs.

Based on our visual observations of pavement conditions, corings and soil analysis and pavement analysis we have developed a pavement rehabilitation recommendation for each of the streets in Contract IV. **Table 3** shows our proposed recommendations and associated costs.

Table 3 – Cost Analysis

Street Name	Comments/Recommendations	Reclamation Cost	Milling Cost	Paving Cost	Bit. Conc. Curbs	Total Cost
Baldwin Avenue	Full Depth Reclamation	$5,799		$13,514	$5,847	$25,159
Beverly Road	Full Depth Reclamation	$16,739		$39,007	$11,980	$67,725
Booth Hill Road	Full Depth Reclamation from MacDonald north. Mill and overlay from MacDonald south.	$23,333	$76,031	$330,540	$15,600	$445,505
Briar Hill Drive	Mill and overlay		$4,781	$17,367		$22,148
Briarwoods Terrace	Mill and overlay		$16,892	$61,356		$78,247
Butternut Lane	Mill and overlay		$7,405	$26,898		$34,303
Carriage Drive	Mill and overlay		$7,815	$28,385		$36,199
Carrousel Drive	Mill and overlay		$12,513	$45,451		$57,964
Civkin Drive	Mill and overlay		$6,739	$24,477		$31,215
Columbine Drive	Full Depth Reclamation	$85,268		$198,706	$47,026	$330,999
Copper Kettle Road	Mill and overlay		$18,298	$66,461		$84,759
Dogwood Lane	Mill and overlay		$18,276	$66,382		$84,658
East Lake Road	Mill and overlay		$4,121	$14,968		$19,089
Erwin Street	Full Depth Reclamation	$24,099		$56,158	$14,748	$95,005
Ethel Road	Full Depth Reclamation	$16,674		$38,856	$7,916	$63,445
Fern Circle	Full Depth Reclamation	$8,298		$19,338	$7,124	$34,761
Garnet Place	Full Depth Reclamation	$8,883		$20,700	$5,104	$34,687
Garnet Road	Full Depth Reclamation	$23,414		$54,562	$13,194	$91,169

Gingerbrook Drive	Full Depth Reclamation	$11,583		$26,994	$6,424	$45,001
Golden Hill	Mill and overlay		$34,061	$123,718		$157,779
Green Ridge Road	Mill and overlay		$15,521	$56,377		$71,899
Heartwood Lane	Full Depth Reclamation	$18,323		$42,700	$9,099	$70,123
Hillandale Terrace	Full Depth Reclamation	$30,079		$70,094	$15,993	$116,165
Hilltop Circle	Mill and overlay		$8,355	$30,347		$38,702
Hilltop Drive	Mill and overlay		$8,078	$29,343		$37,422
Hunters Lane	Mill and overlay		$8,744	$31,762		$40,506
Jerusalem Hill	Full Depth Reclamation	$20,080		$46,793	$17,961	$84,835
Kenwood Lane	Full Depth Reclamation	$19,069		$44,438	$10,278	$73,785
Kingsbury Drive	Mill and overlay		$19,266	$69,981		$89,247
Lobsterback Road	Full Depth Reclamation	$45,809		$106,752	$23,523	$176,084
Long View Road	Full Depth Reclamation	$25,438		$59,281	$12,871	$97,591
Macdonald Road	Mill and overlay		$12,646	$45,934		$58,580
Mischa Hill Road	Mill and overlay		$10,669	$38,751		$49,419
North Street	Full Depth Reclamation	$62,823		$146,400	$35,228	$244,451
North Stowe Place	Mill and overlay		$10,421	$37,852		$48,272
Old Green Road	Full Depth Reclamation	$23,755		$55,359	$18,250	$97,364
Oriole Lane	Full Depth Reclamation	$19,497		$45,435	$10,811	$75,743
Over Hill Drive	Mill and overlay		$5,606	$20,361		$25,967
Pachaug Road	Mill and overlay		$10,034	$36,445		$46,479
Partridge Lane	Mill and overlay		$14,506	$52,690		$67,196
Powder Mill Lane	Mill and overlay		$8,954	$32,524		$41,478
Primrose Drive	Mill and overlay		$23,789	$86,408		$110,197
Red Fox Lane	Mill and overlay		$17,672	$64,188		$81,859
Rennison Road	Full Depth Reclamation	$22,855		$53,261	$14,140	$90,257
Round Ridge Trail	Mill and overlay		$9,027	$32,787		$41,814
Saybrook Road	Mill and overlay		$8,189	$29,745		$37,934
Skyview Drive	Mill and overlay		$23,453	$85,188		$108,641
St. Johns Drive	Full Depth Reclamation	$47,171		$109,925	$24,897	$181,992
Sweetbriar Road	Mill and overlay		$7,983	$28,998		$36,981
Tamarack Circle	Full Depth Reclamation	$14,195		$33,080	$7,175	$54,451
Teeter Rock Road	Mill and overlay		$30,643	$111,303		$141,946
Tory Lane	Mill and overlay		$3,990	$14,494		$18,484
Turkey Meadow Road	Mill and overlay		$17,109	$62,145		$79,255
Twin Circle Drive	Mill and overlay		$10,491	$38,108		$48,599
Wheeler Drive	Mill and overlay		$5,492	$19,949		$25,442
Wisteria Drive	Mill and overlay		$7,146	$25,957		$33,104
Woodcrest Avenue	Full Depth Reclamation	$56,866		$132,517	$32,631	$222,014
	SUBTOTALS	**$630,051**	**$504,718**	**$3,301,507**	**$367,820**	**$4,804,097**

Huntington Road	This road was previously reconstructed by the CT DOT. No roadwork anticipated in the sewer contract.	$0	$0	$0	$0	$0

Huntington Turnpike Rte. 108	This is a State road partially reconstructed in 1985. The reconstructed portion was 0.75" class 14 on 1.5" class 1 on 3" class 1 on 6" class 4 on 10" sub base. The overlay portion was 1.5" class 1 over the existing pavement. Cost includes 9" bit. concrete patch at sewer and 2" mill and overlay.	$0	$49,059	$301,716	$0	$350,775
Merritt Blvd.	This road is to be rehabilitated under a separate road program funded by the Conn DOT. Road is being paved under a separate town contract.	$0	$0	$0	$0	$0
Shelton Road	This was a former DOT roadway and currently has 3-4" bituminous concrete surface course over 8" concrete surface course. The 3" temporary patch should be removed and a 8-10" bituminous patch should be installed and a overlay may be installed in 10 years	$0	$46,612	$321,145	$0	$367,757
	SUBTOTALS	**$0**	**$95,671**	**$622,861**	**$0**	**$718,532**
	TOTALS	**$630,051**	**$600,390**	**$3,924,368**	**$367,820**	**$5,522,629**

Sedimentation & Erosion Control	**$10,000**
Project Survey & Stakeout	**$20,000**
Base Course Patching at Milled Roadways	**$60,000**
Maintenance & Protection of Traffic	**$25,000**
Traffic Men	**$150,000**
Signing & Striping	**$20,000**
PAVING PROJECT TOTAL	**$5,810,000**

Notes: Milling unit cost $3/SY, Full Depth Reclamation unit cost $7/SY, Bit. Conc. Curb unit cost $6.50/LF, Paving unit cost $100/Ton

DRAFT

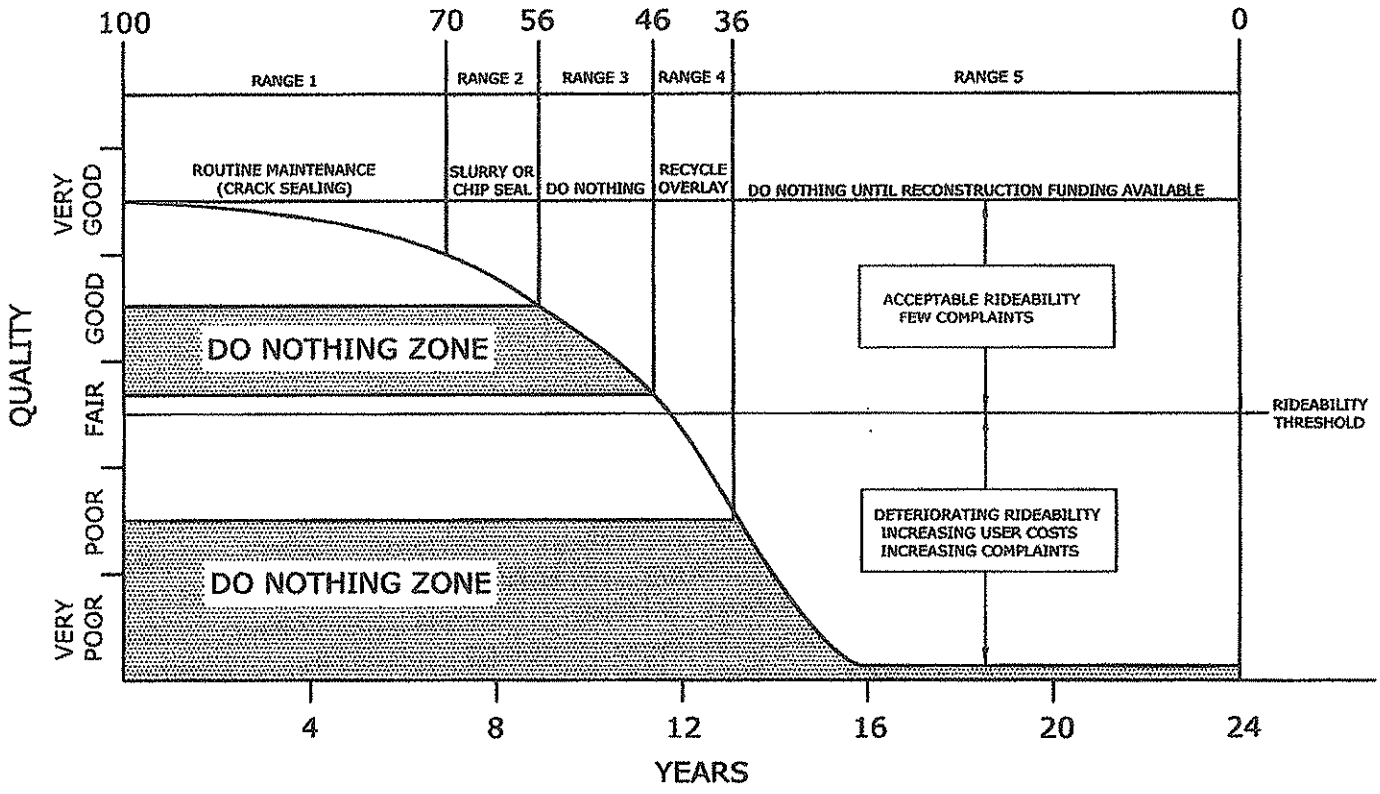

Contract 4 - North Nichols Sewers

Trumbull, Connecticut

PAVEMENT DETERIORATION

FIGURE 5

Tighe&Bond

Tighe & Bond, Inc. J:\TYT0201\REPORT\Figures\Figure 5.dwg

Resolution TC23-168

~~Resolution 5-11-02~~

RESOLUTION APPROPRIATING $7,150,000 FOR THE TRUMBULL CAPITAL IMPROVEMENT PLAN 2011-2012 AND AUTHORIZING THE ISSUE OF $7,150,000 BONDS OF THE TOWN TO MEET SAID APPROPRIATION AND PENDING THE ISSUANCE THEREOF THE MAKING OF TEMPORARY BORROWINGS FOR SUCH PURPOSE

Section 1. The sum of $7,150,000 is appropriated for the planning, acquisition and construction of the Town of Trumbull Capital Improvement Plan 2011-2012, as adopted and amended by the Town Council from time to time, and consisting of: (i) Board of Education; (ii) Roadway reconstruction and improvment (iii) Public facilities; (vi) Fleet and equipment; (vii) other projects; and for appurtenances, equipment and services related thereto, or so much thereof as may be accomplished within such appropriation, including administrative, advertising, printing, legal and financing costs to the extent paid therefrom, said appropriation to be in addition to all prior appropriations for said purpose and inclusive of any and all State and Federal grants-in-aid. The Town Council may by resolution transfer funding herein authorized among projects within the 2011-2012 CIP.

Section 2. To meet said appropriation $7,150,000 bonds of the Town or so much thereof as shall be necessary for such purpose, shall be issued, maturing not later than the twentieth year after their date. Said bonds may be issued in one or more series as determined by the First Selectman and the and the Town Treasurer (hereafter the Town Officials), and the amount of bonds of each series to be issued shall be fixed by the Town Officials. Said bonds shall be issued in the amount necessary to meet the Town's share of the cost of the project determined after considering the estimated amount of the State and Federal grants-in-aid of the project, or the actual amount thereof if this be ascertainable, and the anticipated times of the receipt of the proceeds thereof, provided that the total amount of bonds to be issued shall not be less than an amount which will provide funds sufficient with other funds available for such purpose to pay the principal of and the interest on all temporary borrowings in anticipation of the receipt of the proceeds of said bonds outstanding at the time of the issuance thereof, and to pay for the administrative, printing and legal costs of issuing the bonds. Capital project revenues, including bid premiums and investment income derived from investment of bond proceeds (and net investment income derived from note proceeds) are authorized to be credited by the Director of Finance to the project account and expended to pay project expenses customarily paid therefrom. The remaining appropriation and bond authorization shall be reduced by the amount of capital project revenues so credited. The bonds shall be in the denomination of $1,000 or a whole multiple thereof, or, be combined with other bonds of the Town and such combined issue shall be in the denomination per aggregate maturity of $1,000 or a whole multiple thereof, be issued in bearer form or in fully registered form, be executed in the name and on behalf of the Town by the manual or facsimile signatures of the Town Officials, bear the Town seal or a facsimile thereof, be certified by a bank or trust company designated by the Town Officials, which bank or trust company may be designated the registrar and transfer agent, be payable at a bank or trust company designated by the Town Officials, and be approved as to their legality by Joseph Fasi LLC, of Hartford. They shall bear such rate or rates of interest as shall be determined by the Town Officials. The bonds shall be general obligations of the Town and each of the bonds shall

recite that every requirement of law relating to its issue has been duly complied with, that such bond is within every debt and other limit prescribed by law, and that the full faith and credit of the Town are pledged to the payment of the principal thereof and the interest thereon. The aggregate principal amount of the bonds to be issued, the annual installments of principal, redemption provisions, if any, the date, time of issue and sale and other terms, details and particulars of such bonds, shall be determined by the Town Officials, in accordance with the General Statutes of the State of Connecticut, as amended.

Section 3. Said bonds shall be sold by the Town Officials, in a competitive offering or by negotiation, in their discretion. If sold at competitive offering, the bonds shall be sold upon sealed proposals, auction, or similar competitive process at not less than par and accrued interest on the basis of the lowest net or true interest cost to the Town. A notice of sale or a summary thereof describing the bonds and setting forth the terms and conditions of the sale shall be published at least five days in advance of the sale in a recognized publication carrying municipal bond notices and devoted primarily to financial news and the subject of state and municipal bonds. If the bonds are sold by negotiation, the provisions of purchase agreement shall be subject to approval of the Town Council.

Section 4. The Town Officials, are authorized to make temporary borrowings in anticipation of the receipt of the proceeds of said bonds. Notes evidencing such borrowings shall be executed in the name and on behalf of the Town by the manual or facsimile signatures of the Town Officials, bear the Town seal or a facsimile thereof, be payable at a bank or trust company designated by the Town Officials, be approved as to their legality by Joseph Fasi LLC, of Hartford, and be certified by a bank or trust company designated by the Town Officials, pursuant to Section 7-373 of the General Statutes of Connecticut, as amended. They shall be issued with maturity dates which comply with the provisions of the General Statutes governing the issuance of such notes, as the same may be amended from time to time. The notes shall be general obligations of the Town and each of the notes shall recite that every requirement of law relating to its issue has been duly complied with, that such note is within every debt and other limit prescribed by law, and that the full faith and credit of the Town are pledged to the payment of the principal thereof and the interest thereon. The net interest cost on such notes, including renewals thereof, and the expense of preparing, issuing and marketing them, to the extent paid from the proceeds of such renewals or said bonds, shall be included as a cost of the project. Upon the sale of said bonds, the proceeds thereof, to the extent required, shall be applied forthwith to the payment of the principal of and the interest on any such notes then outstanding or shall be deposited with a bank or trust company in trust for such purpose.

Section 5. Resolution of Official Intent to Reimburse Expenditures with Borrowings. The Town (the "Issuer") hereby expresses its official intent pursuant to §1.150-2 of the Federal Income Tax Regulations, Title 26 (the "Regulations"), to reimburse expenditures paid sixty days prior to and after the date of passage of this ordinance in the maximum amount and for the capital project defined in Section 1 with the proceeds of bonds, notes, or other obligations ("Bonds") authorized to be issued by the Issuer. The Bonds shall be issued to reimburse such expenditures not later than 18 months after the later of the date of the expenditure or the substantial completion of the project, or such later date the Regulations may authorize. The Issuer hereby certifies that the intention to reimburse as expressed herein is based upon its

reasonable expectations as of this date. The Director of Finance or his designee is authorized to pay project expenses in accordance herewith pending the issuance of reimbursement bonds, and to amend this declaration.

Section 6. The Town Officials, are hereby authorized to exercise all powers conferred by section 3-20e of the general statutes with respect to secondary market disclosure and to provide annual information and notices of material events as enumerated in Securities and Exchange Commission Exchange Act Rule 15c2-12, as amended, as may be necessary, appropriate or desirable to effect the sale of the bonds and notes authorized by this ordinance.

Section 7. It is hereby found and determined that it is in public interest to issue all, or a portion of, the Bonds, Notes or other obligations of the Town as qualified private activity bonds, or with interest that is includable in gross income of the holders thereof for purposes of federal income taxation. The Town Officials are hereby authorized to issue and utilize without further approval any financing alternative available to municipal governments pursuant to HR1, "Making Supplemental Appropriations for Job Preservation and Creation, Infrastructure Investment, Energy Efficiency and Science, Assistance to the Unemployed, and State and Local Fiscal Stabilization, for the Fiscal Year Ending September 30, 2009, and for other purposes" (the "American Recovery and Reinvestment Act of 2009"), as amended, reauthorized, or analogous legislation, including but not limited to any "tax credit bond," or "Build America Bonds" including Direct Payment and Tax Credit Versions.

Captial Improvements Funding Plan

				FUNDING SOURCES				
	CY 2011	CY 2012	TOTAL	LOCIP	ROAD AID	GRANTS	BUDGET	BOND AMT
CATEGORY								
BOE	300,000	-	300,000	-	-	-	-	300,000
ROADWAYS	1,738,817	1,961,664	3,700,481	-	534,905	-	240,000	2,925,576
PUBLIC FACILITIES	727,700	1,185,800	1,913,500	34,200	-	375,620	-	1,503,680
FLEET & EQUIP	1,032,722	568,000	1,600,722	-	-	40,000	430,075	1,130,647
OTHER PROJECTS	2,707,500	349,615	3,057,115	100,000	272,000	1,370,500	92,000	1,222,615
TOTAL	6,506,739	4,065,079	10,571,818	134,200	806,905	1,786,120	762,075	7,082,518

2-15-12

CATEGORY	DESCRIPTION	CY 2011	CY 2012	TOTAL	LOCIP	ROAD AID	GRANT	BUDGET	BOND AMT
Board of Education	Asbestos Abatement	84,000		84,000					84,000
Board of Education	UPS System	70,000		70,000					70,000
Board of Education	Steam Trap Service	27,500		27,500					27,500
Board of Education	Roof Dam	32,000		32,000					32,000
Board of Education	Gas Pipe to Boiler	45,000		45,000					45,000
Board of Education	Reach Roof replacement/renovation	41,500		41,500					41,500
		300,000	-	300,000	-	-	-	-	300,000

5-11-12

CATEGORY	LOCATION	CY 2011	CY 2012	TOTAL	LOCIP	ROAD AID	GRANT	BUDGET	BALANCE
Roadways	Stonehouse Road	488,695		488,695					
Roadways	Moose Hill Road	191,947		191,947					
Roadways	Quarry Road	34,376		34,376					
Roadways	Fawn Meadow Road	122,715		122,715					
Roadways	Corporate Drive	185,447		185,447					
Roadways	Danube	40,917		40,917					
Roadways	Petticoat	43,431		43,431					
Roadways	Cedar Hill	50,245		50,245					
Roadways	Old Fire	61,867		61,867					
Roadways	Iron Gate	113,642		113,642					
Roadways	Knecht Farm	13,139		13,139					
Roadways	Cypress/Hillside	50,616		50,616					
Roadways	Heavenly Lane	74,087		74,087					
Roadways	Round Hill Road	107,596		107,596					
Roadways	Topaz	160,097		160,097					
Roadways	Jackson Drive		121,828	121,828					
Roadways	Dayton Road		458,572	458,572					
Roadways	Bonazzo Drive		41,252	41,252					
Roadways	Macholowski		46,885	46,885					
Roadways	Skating Pond		144,940	144,940					
Roadways	Winnter		14,379	14,379					
Roadways	Roosevelt		267,274	267,274					
Roadways	Strobel Rd		538,510	538,510					
Roadways	Porters Hill		178,024	178,024					
Roadways	Tanglewood		150,000	150,000					
		1,738,817	1,961,664	3,700,481	-	534,905	-	240,000	2,925,576

BUILDING	CATEGORY	DESCRIPTION	CY 2011	CY 2012	TOTAL	LOCIP	ROAD AID	GRANT	BUDGET	BOND AMT
Trumbull Library	Mechanical	Heating Valve System Replacement	-	60,000	60,000					60,000
Trumbull Library	Mechanical	HVAC Digital Control System	-	65,000	65,000					65,000
Trumbull Library	Mechanical	Ventilation System	-	10,000	10,000					10,000
Town Hall	Thermal & Moisture Protection	Roofing	-	76,000	76,000					76,000
Town Hall	Doors & Windows	Windows Replacement	266,000		266,000	34,200		125,620		106,180
Town Hall	Doors & Windows	Interior Doors	-	14,000	14,000					14,000
Town Hall	Doors & Windows	Aluminum Entrance Frames	-	80,000	80,000					80,000
Town Hall	Conveying Systems	Elevator	250,000		250,000			250,000		-
Town Hall Annex	Wood & Plastics	Stairs, Railings, and Ramp Replacement	30,000	-	30,000					30,000
Town Hall Annex	Doors & Windows	Exterior Doors	10,000	-	10,000					10,000
Police Hdqtrs	Masonry	Exterior Walls Replacement and Brick Repair	-	280,000	280,000					280,000
Police Hdqtrs	Metals	Guard Rails	-	14,000	14,000					14,000
Police Hdqtrs	Wood & Plastics / Doors & Windows	Wood Window Stools	-	18,500	18,500					18,500
Police Hdqtrs	Thermal & Moisture Protection	Roofing	87,000	-	87,000					87,000
Police Hdqtrs	Doors & Windows	Window Replacement	-	82,000	82,000					82,000
Senior Ctr	Thermal & Moisture Protection	Roofing	36,500	-	36,500					36,500
Senior Ctr	Equipment	Kitchen Renovation	-	15,500	15,500					15,500
Senior Ctr	ADA Compliance	Bathroom Renovations	-	9,300	9,300					9,300
Public Works Yard	Mechanical	Boiler Insulation/Controls and Baseboards	48,200	-	48,200					48,200
Public Works Yard	Electrical	Automatic Generator	-	200,000	200,000					200,000
Public Works Yard	Electrical	Electrical Wiring	-	175,000	175,000					175,000
EMS Building	Doors & Windows	Window Replacement	-	30,000	30,000					30,000
EMS Building	Doors & Windows	Exterior/ Interior/ Garage Doors	-	44,500	44,500					44,500
EMS Building	Mechanical	Exhaust System - Toilet Rooms & Kitchen	-	12,000	12,000					12,000
			727,700	1,185,800	1,913,500	34,200	-	375,620	-	1,503,680

5-11-02

DEPT	Make	MODEL / DESCRIPTION	YEAR	CY 2011	CY 2012	TOTAL	LOCIP	ROAD AID	GRANT	BUDGET	BOND AMT
Police	CHEVROLET	Trailblazer	2003	24,000		24,000				24,000	-
Police	FORD	Crown Victoria	2010		24,000	24,000				24,000	-
Police	FORD	Crown Victoria	2010	24,000		24,000				24,000	-
Police	FORD	Crown Victoria	2008	24,000		24,000				24,000	-
Police	FORD	Crown Victoria	2008	24,000		24,000				24,000	-
Police	FORD	Crown Victoria	2007	24,000		24,000				24,000	-
Police	FORD	Crown Victoria	2005	24,000		24,000				24,000	-
Senior Center	FORD	Cutaway	2001	55,000		55,000			40,000	15,000	-
Highway	INTERNATIONAL	SNOWPLOW/SANDER	1983	160,000		160,000					160,000
Highway	INTERNATIONAL	SNOWPLOW/SANDER	1984	160,000		160,000					160,000
Highway	INTERNATIONAL	SNOWPLOW/SANDER	1985	160,000		160,000					160,000
Highway	INTERNATIONAL	SNOWPLOW/SANDER	1987		160,000	160,000					160,000
Highway	INTERNATIONAL	SNOWPLOW/SANDER	1987		160,000	160,000					160,000
Highway	TARCO	BIG T VAC	1993	26,000		26,000				26,000	-
Highway	TARCO	BIG T VAC	1993	26,000		26,000				26,000	-
Highway	DODGE	RAM PICKUP	1995	28,400		28,400				28,400	-
Highway	JOHN DEERE	BACKHOE	1996	91,000		91,000					91,000
Highway	CHEVROLET	SILVERADO	2002	28,400		28,400				28,400	-
Highway	INGERSOLL RAND	COMPRESSOR	1985	12,780		12,780				12,780	-
Parks	Pequea	Trailer	1994	3,495		3,495				3,495	-
Parks	CHEVROLET	3500	2000	48,000		48,000				48,000	-
Parks	CHEVROLET	2500	2000		48,000	48,000				48,000	-
Parks	TORO	Groundsmaster 580-D		89,647		89,647					89,647
Parks	Scag	Turf Tiger Mower			11,500	11,500				11,500	-
Parks	Scag	Turf Tiger Mower			14,500	14,500				14,500	-
EMS	FORD	158 SUPER DUTY CUTAWAY	2003		150,000	150,000					150,000
				1,032,722	568,000	1,600,722	-	-	40,000	430,075	1,130,647

5-1-12

Projects

ET	BOND AMT
	-
	-
	-
	200,000
	18,000
	275,000
	400,000
	20,000
	60,000
	18,000
,000	-
	10,065
	71,550
	150,000
	-
	-
,500	-
,000	-
,000	-
,500	-
,000	1,222,615

CATEGORY	LOCATION	DESCRIPTION	CY 2011	CY 2012	TOTAL	LOCIP	ROAD AID	GRANT	BUD
Economic Development	Trumbull Corporate Park	Merritt Blvd Streetscape/Signage	100,000		100,000			100,000	
Economic Development	Trumbull Center	Streetscape	92,500		92,500			92,500	
Economic Development	Trumbull Corporate Park	Merritt Blvd Repaving	1,410,000		1,410,000	50,000	272,000	1,088,000	
Economic Development	Trumbull Corporate Park	Nutmeg & Commerce Drive Repaving	200,000		200,000				
Park Improvements	Various	Tennis Court Surfacing		18,000	18,000				
Other Projects	Highway	Construct Salt Shed	275,000		275,000				
Other Projects	Highway	Pre-engineered Garages	400,000		400,000				
Other Projects	Town Hall	Window Shutters		20,000	20,000				
Other Projects	Berkshire Avenue Storage Garage	Roof Replacement	60,000		60,000				
Other Projects	Engineering	Survey Equipment	18,000		18,000				
Other Projects	Tax Collector	Cashier Security Counters		10,000	10,000				1(
Other Projects	Town Clerk	Space Reconfiguration		10,065	10,065				
Other Projects	Highway	GPS		71,550	71,550				
Other Projects	Highway	Wash Bay		150,000	150,000				
Other Projects	Town-Wide	Energy Audit Consultant	50,000		50,000	50,000			
Public Safety	Police Department	Radio Amplification at THS	90,000		90,000			90,000	
Technology	Senior Center	Disaster Recovery / Server & Storage		22,500	22,500				2
Technology	Town-wide	Domain Controllers	12,000		12,000				1
Technology	Town-wide	Upgrade Email Server Support		15,000	15,000				1
Technology	Town Hall	Updgrade Storage Infrastructure		32,500	32,500				3
			2,707,500	349,615	3,057,115	100,000	272,000	1,370,500	9

Resolution TC 23-169

~~Resolution 5-11-03~~

RESOLUTION AMENDING A RESOLUTION APPROPRIATING $68,672,000 FOR THE COSTS ASSOCIATED WITH THE "RENOVATION AS NEW" AND EXPANSION OF TRUMBULL HIGH SCHOOL AND AUTHORIZING THE ISSUE OF $68,672,000 BONDS OF THE TOWN TO MEET SAID APPROPRIATION AND PENDING THE ISSUANCE THEREOF THE MAKING OF TEMPORARY BORROWINGS FOR SUCH PURPOSE

Section 1. The Town Council of the Town of Trumbull has to date adopted various bond authorizing resolutions to finance the planning, acquisition and construction of improvements to Trumbull High School, including a resolution entitled "Resolution Appropriating $68,672,000 For The Costs Associated With The "Renovation As New" And Expansion Of Trumbull High School And Authorizing The Issue Of $68,672,000 Bonds Of The Town To Meet Said Appropriation And Pending The Issuance Thereof The Making Of Temporary Borrowings For Such Purpose" on May 7, 2007, which "Prior Resolution" is hereby ratified, confirmed and adopted, as amended herein. The Prior Resolution is hereby amended by decreasing the appropriation and bond issuance authorization therein by $4 million, from $68,672,000 to $64,672,000 as follows:

Section 2. The title of the Resolution is amended to read as follows:

RESOLUTION APPROPRIATING $64,672,000 FOR THE COSTS ASSOCIATED WITH THE "RENOVATION AS NEW" AND EXPANSION OF TRUMBULL HIGH SCHOOL AND AUTHORIZING THE ISSUE OF $64,672,000 BONDS OF THE TOWN TO MEET SAID APPROPRIATION AND PENDING THE ISSUANCE THEREOF THE MAKING OF TEMPORARY BORROWINGS FOR SUCH PURPOSE

Section 3. The amount $64,672,000 is substituted for the amount $68,672,000 wherever $68,672,000 appears in the Prior Resolution adopted May 7, 2007.

Section 4. The following is inserted as section 11 of the Resolution:

"Section 11. It is hereby found and determined that it is in public interest to issue all, or a portion of, the Bonds, Notes or other obligations of the Town as qualified private activity bonds, or with interest that is includable in gross income of the holders thereof for purposes of federal income taxation. The First Selectman, Treasurer and Director of Finance, are hereby authorized to issue and utilize without further approval any financing alternative available to municipal governments pursuant to HR1, "Making Supplemental Appropriations for Job Preservation and Creation, Infrastructure Investment, Energy Efficiency and Science, Assistance to the Unemployed, and State and Local Fiscal Stabilization, for the Fiscal Year Ending September 30, 2009, and for other purposes" (the "American Recovery and Reinvestment Act of 2009"), as the same may be reauthorized or reenacted, or analogous legislation, including but not limited to any "tax credit bond," or "Build America Bonds" including Direct Payment and Tax Credit Versions."

5-11-03

O&G INDUSTRIES, INC. / A.P. CONSTRUCTION A JOINT VENTURE

TRUMBULL HIGH SCHOOL

72 STROBEL ROAD

TRUMBULL, CT 06611

Renovation Project

CURRENT COST ANALYSIS

March 2, 2011

ARCHITECT

JCJ ARCHITECTURE, INC. / WILES + ARCHITECTS
38 PROSPECT ST., HARTFORD, CT 06103

PREPARED BY:
RANDY SWINFORD
PROJECT MANAGER

BRIAN HOLMES
ASSISTANT VICE PRESIDENT

Trumbull High School Renovation
Cost Summary Data
3/2/2011

Construction Costs		
Agreed GMP	$	50,171,603
Approved & Pending Changes	$	369,016
Sub-Total GMP	$	50,540,619
Soft Costs		
Owners Cost	$	8,946,022
Owners Contingency	$	2,031,013
Sub-Total Owners Cost	$	10,977,034
Total Project Costs	$	61,517,653
Anticipated Scope Revisions:		
Paving & Landscaping	$	1,455,090
Concession Stand - Allowance	$	515,955
Increase Budget for FF&E	$	156,000
Increase Budget for Technology - Police Communication	$	97,000
Sub-Total Anticipated Scope Revisions	$	2,224,045
Total Anticipated Project Costs	$	63,741,698
Project Budget as Approved by Town Council	$	68,672,000
Variance	$	(4,930,302)

Progress of Work		
Work Completed To Date	$	19,652,294
Work Completed as Percentage of Total Cost		38.9%
Changes as Percentage of Work Completed		1.88%

O&G/AP Const- a JV

TRUMBULL HIGH SCHOOL
PHASES 1A & 2

Trumbull, Connecticut

March 2, 2011

COST SUMMARY

	QTY	U/M	PHASE 1A COSTS	PHASE 2 COSTS	TOTAL COSTS
CONSTRUCTION COSTS:					
1 SITE DEVELOPMENT			393,628	529,890	923,518
2 BUILDING CONSTRUCTION					
TRADE CONTRACTS - INC ACCEPTED ALTERNATES			8,045,944	34,096,198	42,142,142
ACCEPTED CO's (TRADE COSTS)			266,512	34,357	300,869
PENDING ADJUSTMENTS TO GMP			0	114,934	114,934
Subtotal:			8,706,084	34,775,379	43,481,463
REIMBURSABLES					
4 BUILDING PERMIT FEE - STATE FEE ONLY	0.022	%	1,857	7,616	9,473
5 C.M. REIMBURSABLES	36	MO	566,460	1,699,395	2,265,855
6 ALLOWANCES	1	LS	114,760	149,580	264,340
Subtotal:			683,077	1,856,591	2,539,668
Cost of the Work			9,389,161	36,631,970	46,021,131
CONTINGENCY:					
1 CM CONTINGENCY			448,367	2,362,440	2,810,807
Subtotal:			448,367	2,362,440	2,810,807
Cost of the Work inc. Contingencies			9,837,528	38,994,410	48,831,938
C.M. BONDS & INSURANCE:					
1 CM GL INSURANCE	0.75	%	73,886	292,478	366,364
2 CM BOND			64,858	295,369	360,227
Subtotal:			9,976,272	39,582,257	49,558,529
C.M. FEES:					
1 PRE CONSTRUCTION FEE	1	LS	30,000	120,000	150,000
2 CM FEE	1.70	%	168,517	663,573	832,090
TOTAL - GMP			$10,174,789	40,365,830	50,540,619

	QTY	U/M	PHASE 1A COSTS	PHASE 2 COSTS	TOTAL COSTS
OWNER "SOFT" COSTS:					
NOTE - (THESE ARE SHOWN FOR GENERAL INFORMATION ONLY, O&G/AP CONST HAS NO ACCURATE RECORD OF, AND NO CONTROL OVER THESE COSTS. OWNER MUST CONFIRM ALL OF THESE COSTS)					
1. Land Acquisition			0	0	0
2. A/E Fees			508,600	2,803,325	3,311,925
a. A/E Reimbursables				151,000	151,000
3. Misc. Administration Costs			5,500	39,500	45,000
4. Surveying (For Scope Outside of A/E Fees)			In Item #2	0	0
5. Borings & GeoTech			11,950	0	11,950
6. Traffic Study (inc in A/E Fees)			In Item #2	0	0
7. Peer Review			4,000	8,500	12,500
8. Testing & Special Inspections			40,000	45,000	85,000
9. Independent Code Compliance Review			0	0	0
10. Bid Printing & Mailing			10,000	35,000	45,000
11. FF&E Consultant			0	80,680	80,680
12. Tech Consultant			0	Inc. in Item #25	0
13. Abatement Consultant			8,700	60,000	68,700
14. Insurance (Builders Risk)			32,559	129,171	161,730
15. Legal			10,000	90,000	100,000
16. Financing			160,060	1,244,028	1,404,088
17. Moving & Storage			20,000	80,000	100,000
18. CT Permit Fee (By CM)			0	0	0
19. Commissioning Agent			26,730	140,953	167,683
20. Owners Representative			94,819	497,581	592,400
21. Conservation Consultant			0	0	0
22. Misc. Work Items Contracted Directly by Owner			3,885	25,661	29,546
23. Building Official Fees - Local Review			9,500	0	9,500
24. F.F. & E			0	919,320	919,320
25.Technology Equipment			0	750,000	750,000
26. Telephone System (Portion to be bought direct by Owner)			0	125,000	125,000
27. Security			0	0	0
28. On Site work by Town			25,000	0	25,000
29. Abatement (Allowance)			85,000	665,000	750,000
30. Owners Contingency			16,401	2,014,612	2,031,013
SUBTOTAL - SOFT COSTS (ESTIMATED)			1,072,704	9,904,330	10,977,034
TOTAL PROJECT COSTS - ESTIMATED			**$11,247,492**	**$50,270,160**	**$61,517,653**
TOTAL PROJECT BUDGET					**$68,672,000**
ESTIMATED VARIANCE					**($7,154,347)**

DRAFT

TRUMBULL HIGH SCHOOL PROJECTED CASH FLOW REPORT (UPDATED March 2, 2011)

NOTE - CONSTRUCTION COSTS ONLY, BASED ON OBTAINING RENOVATION STATUS AFTER COMPLETION OF CONSTRUCTION

		TRUMBULL HIGH SCHOOL PH 1			TRUMBULL HIGH SCHOOL PH 2			REIMB.	5% Retained by SDE MONTHLY REIMBURSEMENT FROM BSF	CUMULATIVE REIMBURSEMENT	MONTHLY COST TO OWNER	CUMULATIVE COST TO OWNER	ESTIMATED MONTHLY COMPLETED	ESTIMATED TOTAL COMPLETED	REQ #	ACTUAL NET BILLED AMOUNT	ACTUAL TOTAL COMPLETED	VARIANCE OF TOTAL COMPLETED
YEAR	MONTH	ELIGIBLE	INELIGIBLE	TOTAL	ELIGIBLE	INELIGIBLE	TOTAL	RATE										
															1	$ 29,200	$ 29,200	$29,200
2009	AUG - 2009	$53,704	$38,889	$92,593	$0	$0	$0	0.3071	$15,668	$15,668	$76,925	$76,925	$92,593	$92,593	2	$ 301,676	$ 346,948	$254,355
	SEPTEMBER	$145,000	$105,000	$250,000	$0	$0	$0	0.3071	$42,303	$57,971	$207,697	$284,622	$250,000	$342,593	3	$ 443,935	$ 812,758	$470,165
	OCTOBER	$174,000	$126,000	$300,000	$0	$0	$0	0.3071	$50,764	$108,735	$249,236	$533,858	$300,000	$642,593	4	$ 638,749	$ 1,484,256	$841,663
	NOVEMBER	$261,000	$189,000	$450,000	$0	$0	$0	0.3071	$76,145	$184,880	$373,855	$907,713	$450,000	$1,092,593	5	$ 904,888	$ 2,436,472	$1,343,879
	DECEMBER	$336,400	$243,600	$580,000	$0	$0	$0	0.3071	$98,143	$283,023	$481,857	$1,389,570	$580,000	$1,672,593	6	$ 582,303	$ 3,048,006	$1,375,413
2010	JAN - 2010	$464,000	$336,000	$800,000	$0	$0	$0	0.3071	$135,370	$418,393	$664,630	$2,054,200	$800,000	$2,472,593	7	$ 1,461,149	$ 4,584,583	$2,111,990
	FEBRUARY	$594,500	$430,500	$1,025,000	$0	$0	$0	0.3071	$173,442	$591,835	$851,558	$2,905,758	$1,025,000	$3,497,593	8	$ 553,504	$ 5,166,268	$1,668,673
	MARCH	$710,500	$514,500	$1,225,000	$0	$0	$0	0.3071	$207,285	$799,120	$1,017,715	$3,923,473	$1,225,000	$4,722,593	9	$ 1,146,718	$ 6,371,958	$1,649,385
	APRIL	$826,500	$598,500	$1,425,000	$0	$0	$0	0.3071	$241,127	$1,040,247	$1,183,873	$5,107,346	$1,425,000	$6,147,593	10	$ 959,525	$ 7,065,552	$917,959
	MAY	$594,600	$430,500	$1,025,000	$0	$0	$0	0.3071	$173,442	$1,213,690	$851,558	$5,958,903	$1,025,000	$7,172,593	11	$ 530,845	$ 7,523,748	$451,163
	JUNE	$527,800	$382,200	$910,000	$0	$0	$0	0.3071	$153,983	$1,367,673	$756,017	$6,714,920	$910,000	$8,082,593	12	$ 478,938	$ 8,127,427	$44,834
Update	JULY	$452,864	$327,936	$780,800	$816,000	$884,000	$1,700,000	0.3071	$370,855	$1,738,528	$649,945	$7,364,865	$780,800	$8,863,393	13	$ 2,324,827	$ 10,570,684	$10,057
	AUGUST	$411,600	$298,200	$710,000	$1,200,000	$1,300,000	$2,500,000	0.3071	$470,235	$2,208,092	$2,739,765	$11,565,301	$3,210,000	$13,779,393	14	$ 2,973,380	$ 13,701,108	-$72,286
	SEPTEMBER	$255,200	$184,800	$440,000	$384,000	$416,000	$800,000	0.3071	$186,483	$2,394,575	$1,053,517	$12,618,818	$1,240,000	$15,019,393	15	$ 716,440	$ 14,450,790	-$562,603
	OCTOBER	$92,638	$67,082	$159,720	$480,000	$520,000	$1,000,000	0.3071	$167,064	$2,561,639	$992,656	$13,611,474	$1,159,720	$16,179,113	16	$ 1,560,392	$ 16,092,583	-$80,530
	NOVEMBER				$528,000	$572,000	$1,100,000	0.3071	$154,041	$2,715,681	$945,959	$14,557,432	$1,100,000	$17,273,113	17	$ 1,175,914	$ 17,329,835	$56,722
	DECEMBER				$672,000	$728,000	$1,400,000	0.3071	$198,053	$2,911,733	$1,203,947	$15,761,380	$1,400,000	$18,673,113	18	$ 1,317,076	$ 18,715,558	-$42,423
	JAN - 2011				$480,000	$520,000	$1,000,000	0.3071	$140,038	$3,051,771	$859,962	$16,621,342	$1,000,000	$19,673,113	19	$ 907,691	$ 19,652,284	-$20,819
	FEBRUARY				$576,000	$624,000	$1,200,000	0.3071	$168,045	$3,219,816	$1,031,955	$17,653,297	$1,200,000	$20,873,113				
	MARCH				$576,000	$624,000	$1,200,000	0.3071	$168,045	$3,387,861	$1,031,955	$18,685,252	$1,200,000	$22,073,113				
	APRIL				$576,000	$624,000	$1,200,000	0.3071	$168,045	$3,555,906	$1,031,955	$19,717,207	$1,200,000	$23,273,113				
	MAY				$720,000	$780,000	$1,500,000	0.3071	$210,056	$3,765,963	$1,289,944	$21,007,150	$1,500,000	$24,773,113				
	JUNE				$720,000	$780,000	$1,500,000	0.3071	$210,056	$3,976,019	$1,289,944	$22,297,094	$1,500,000	$26,273,113				
	JULY				$912,000	$988,000	$1,900,000	0.3071	$266,071	$4,242,091	$1,633,929	$23,931,022	$1,900,000	$28,173,113				
	AUGUST				$1,344,000	$1,456,000	$2,800,000	0.3071	$392,105	$4,634,196	$2,407,895	$26,338,917	$2,800,000	$30,973,113				
	SEPTEMBER				$1,296,000	$1,404,000	$2,700,000	0.3071	$378,102	$5,012,297	$2,321,698	$28,660,616	$2,700,000	$33,673,113				
	OCTOBER				$768,000	$832,000	$1,600,000	0.3071	$224,060	$5,236,358	$1,375,940	$30,036,755	$1,600,000	$35,273,113				
	NOVEMBER				$624,000	$676,000	$1,300,000	0.3071	$182,049	$5,418,406	$1,117,951	$31,154,707	$1,300,000	$36,573,113				
	DECEMBER				$624,000	$676,000	$1,300,000	0.3071	$182,049	$5,600,455	$1,117,951	$32,272,658	$1,300,000	$37,873,113				
	JAN - 2012				$624,000	$676,000	$1,300,000	0.3071	$182,049	$5,782,504	$1,117,951	$33,390,609	$1,300,000	$39,173,113				
	FEBRUARY				$624,000	$676,000	$1,300,000	0.3071	$182,049	$5,964,553	$1,117,951	$34,508,560	$1,300,000	$40,473,113				
	MARCH				$624,000	$676,000	$1,300,000	0.3071	$182,049	$6,146,602	$1,117,951	$35,626,511	$1,300,000	$41,773,113				
	APRIL				$624,000	$676,000	$1,300,000	0.3071	$182,049	$6,328,651	$1,117,951	$36,744,462	$1,300,000	$43,073,113				
	MAY				$672,000	$728,000	$1,400,000	0.3071	$196,053	$6,524,703	$1,203,947	$37,948,410	$1,400,000	$44,473,113				
	JUNE				$720,000	$780,000	$1,500,000	0.3071	$210,056	$6,734,760	$1,289,944	$39,238,353	$1,500,000	$45,973,113				
	JULY				$912,000	$988,000	$1,900,000	0.3071	$266,071	$7,000,831	$1,633,929	$40,872,282	$1,900,000	$47,873,113				
	AUGUST				$624,000	$676,000	$1,300,000	0.3071	$182,049	$7,182,880	$1,117,951	$41,990,233	$1,300,000	$49,173,113				
	SEPTEMBER				$470,400	$509,600	$980,000	0.3071	$137,237	$7,320,117	$842,763	$42,832,996	$980,000	$50,153,113				
	OCTOBER				$185,003	$201,503	$387,506	0.3071	$54,265	$7,374,382	$333,241	$43,166,237	$387,506	$50,540,619				
	NOVEMBER				$0	$0	$0	0.3071	$0	$7,374,382	$0	$43,166,237	$0	$50,540,619				
	DECEMBER				$0	$0		0.3071	$0	$7,374,382	$0	$43,166,237	$0	$50,540,619				
	TOTAL	$5,900,406	$4,272,707	$10,173,113	$19,376,403	$20,991,103	$40,367,506		$7,374,382		$43,166,237		$50,540,619			$ 18,707,137		

Resolution TC23-170

~~Resolution 5-11-05~~

RESOLUTION MAKING CERTAIN FINDINGS WITH RESPECT TO UNEXPENDED BOND PROCEEDS OF THE TOWN AND APPROPRIATING SAID PROCEEDS FOR CAPITAL PURPOSES

Section 1. It is hereby found and determined that $338,000 of proceeds derived from the bonds issued pursuant to the $1,152,540 for the Replacement and Expansion of the Town's Public School Facilities (the "Bond Resolution") remain unexpended and are no longer required for the purpose issued, the individual projects being substantially complete. The Bond Resolution identifies in Exhibit A eight specific purposes and amounts for which the proceeds may be expended.

Section 2. The $338,000 above referenced unexpended bond proceeds are hereby reallocated for the following purposes:

	Project	Unexpended Proceeds	Newly Appropriated Purpose
1.	Town Public School Facilities	$338,000	Hillcrest Pool Improvements

TOWN OF TRUMBULL
BOE-EMERGENCY PROJECTS
2006-CURRENT

ORG	OBJECT	DESCRIPTION	BUDGET	EXPENDED 2007	2008	2009	2010	TOTAL	AVAIL
#55120100		BOE EMERGENCY PROJECTS							
	589950	GYM-ROOF	230,000.00	791.00	155,640.00			156,431.00	73,569.00
	589951	REPLACEMENT OF TILE	301,756.00	139,339.18	108,214.11	26,134.19		273,687.48	28,068.52
	589952	BLEACHERS	142,900.00		81,959.63			81,959.63	60,940.37
	589953	THS BLEACHERS	200,000.00	40,802.54	11,350.00			52,152.54	147,847.46
	589954	SECURITY EQUIPMENT	95000		87,435.00		9,463.00	96,898.00	(1,898.00)
	589955	ROOF REPLACEMENT	100000	7649.41	97,949.47			105,598.88	(5,598.88)
	589956	LOCKER ROOM	28000	6557.84	(476.56)		33,125.12	39,206.40	(11,206.40)
	589957	CONTINGENCY	54884	2014.86	3,850.42			5,865.28	49,018.72
			1,152,540.00	197,154.83	545,922.07	26,134.19	42,588.12	811,799.21	340,740.79
		BONDED	1,150,000.00						338,200.79

DEP Bond funds $375,000 July 2010

SUMMARY OF POOL RENOVATION ESTIMATE -4/27/2010

DRAFT

ITEM	COST	NOTES
Deck Repair	$ 15,000.00	
Additional Deck Repair	$ 8,750.00	Removal & replacement of tile.
		Approximate cost based on 5% repair.
Stainless Deck Perimeter Rail	$ 35,750.00	
Deck Equipment	$ 33,400.00	
Hatch Ladder	$ 5,000.00	
Gutter System	$ 3,300.00	
Pool Surface & Shell	$ 26,500.00	
Additional Surface Repair	$ 25,000.00	Remove & replace tile & dry pack mortar.
		Approximate cost based on 10% repair.
	$ 20,000.00	Remove & replace wall tile & dry pask mortar
		Approximate cost bases on 5% repair.
	$ 4,000.00	Remove & replace cove tile and dry pack mortar,
		Approximate cost based on 50 L.F.
Main Drain Replacement	$ 60,000.00	
Filter System Replacement (Less electrical)	$ 75,000.00	
Chemical control & feed equipment	$ 7,500.00	
New Ladders (Optional if needed upon inspection)	$ 14,000.00	
Water Fill Line	$ 6,500.00	
Sub-Total Pool Renovation	$ 339,700.00	**Based on Quote from Brock Pool**
Lighting Replacement Estimate	$ 140,000.00	**Quote from North Haven Electrical**
HVAC Replacement estimate	$ 335,000.00	**Quote from Controlled Air**
New Locker room partions and lockers	*$ 75,000.00*	Estimate- Need final design
Shower plumbing repairs and renovations	*$ 100,000.00*	Estimate-Need final design
Ceiling demo (50k) and re-covering (100k)	*$ 150,000.00*	Estimate
Abatement	*$ 75,000.00*	Asbestos, lead, PCB, etc. estimate
Subtotal all renovation repair costs	$ 1,214,700.00	
A/E costs 8%	$ 97,176.00	
Subtotal with A/E costs	$ 1,311,876.00	
Contingency - 10%	$ 131,187.60	
Total Pool Renovation Estimate	$ 1,443,063.60	

The cost of adding cogeneration is apx. $200,000 based on a quote from Controlled Air. Any incentives or rebates are not included.

The pool dimensions are assumed to stay the same for this quote.

Need Scope & budget
Submit to Dave Stygar @ DEP

12/22/10 DECD passed Bond Commission

REQUEST NOS.	PROJECT	BOND FUND ACCOUNT	AMOUNT
	Department of Economic and Community Development		
1075	To provide a grant-in-aid to Town of East Windsor for reconstruction and resurfacing of roadways within East Windsor Industrial Park.	13019	
	Allocation and Bond Authorization		$600,000
1076	To provide a grant-in-aid to Town of Wethersfield for a façade improvement program for businesses along Berlin Turnpike, Main Street, Silas Deane Highway and other commercial areas.	13019	
	Allocation and Bond Authorization		$250,000
1077	To provide a grant-in-aid to Norwich Free Academy to assist with renovations to Slater Memorial Museum to meet requirements of Americans with Disabilities Act.	13019	
	Allocation and Bond Authorization		$100,000
1078	To provide a grant-in-aid to Town of Trumbull for safety and lighting upgrades to Hillcrest Middle School pool.	13019	
	Allocation and Bond Authorization		$375,000
1079	To provide a grant-in-aid to Town of Branford for renovation and restoration of Town building on Thimble Islands Road for use as Stony Creek Museum and Community Center.	13019	
	Allocation and Bond Authorization		$75,000
1080	To provide a grant-in-aid to City of Hartford for construction of traffic initiatives.	13019	
	Allocation and Bond Authorization		$250,000
1081	To provide a grant-in-aid to Town of Montville for construction of a new police station.	13019	
	Allocation and Bond Authorization		$700,000
1082	To provide a grant-in-aid to Merryall Center for the Arts for building renovations at its facility in New Milford.	13019	
	Allocation and Bond Authorization		$150,000

RECEIVED
APR 13 2011
FIRST SELECTMANS OFFICE

mailed to Deed 4/15/11

DECD

Catherine H. Smith
Commissioner

State of Connecticut
Department of Economic and
Community Development

April 16, 2011

Honorable Timothy M. Herbst
First Selectman
Town of Trumbull
5866 Main Street
Trumbull, CT 06611

Dear First Selectman Herbst:

The Department of Economic and Community Development is pleased to submit a proposal for assistance in support of the Town's plans for safety and lighting upgrades to the Hillcrest Middle School pool. The following pages contain a project description and supporting details of a financial assistance package developed jointly between your staff and ours.

This proposal represents the Governor's continuing commitment to support Connecticut's municipalities and we are pleased to have an opportunity to work with you on this project. The success of your project and your community are important to us.

Our staff will continue to be available to you and your staff throughout the duration of the project. If you have any questions concerning this proposal please contact Sheryl Pearson your development manager, at 860-270-8096 or sheryl.pearson@ct.gov.

Sincerely,

~~Catherine H. Smith~~
~~Commissioner~~
Ronald F. Angelo Jr
Deputy Commissioner

Agreed and Accepted By:

Town of Trumbull

Name

First Selectman
Title

Date

Ver. 1.11.Mun

State of Connecticut

Governor Dannel P. Malloy

Department of Economic and Community Development

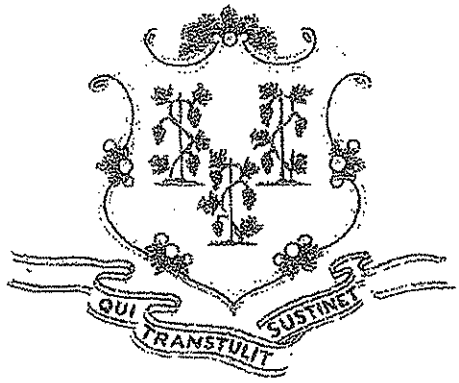

Financial Assistance Proposal

For

The Town of Trumbull

April 2011

Ver. 1.11.Mun

TABLE OF CONTENTS

Background 1
* Applicant Description
* Project Description
* Source and Use of Funds

Financial Assistance 1-5
* Department of Economic and Community Development Financing
* Other Terms and Conditions

DECD Contacts 6
* Department of Economic and Community Development
  Development Manager

Client Obligation Checklist 7

Next Steps 8
* Certified Resolution
* Environmental Reports, as required

Schedule A – Construction Related Documentation 10

Schedule B - DECD and State Single Audit Submission Requirements 11-16

BACKGROUND

Applicant Description: The Town of Trumbull is located in Fairfield County. The Town offers a centralized location where municipal buildings, retail and restaurants are found. The Town spans an area of 23 square miles, with a population of about 36,000. Trumbull was incorporated in 1797 and named for the Revolutionary War Governor Jonathan Trumbull.

Project Description: State Urban Act (OPM) grant funds of $375,000 will be used by the Town of Trumbull for safety and lighting upgrades to the Hillcrest Middle School pool. The Hillcrest pool is a municipally owned, operated and maintained recreation facility located within the Town of Trumbull.

SOURCE AND USE OF FUNDS

Sources of Funds

Department of Econ. and Comm. Develop. –Urban Act	$375,000
Total	**$375,000**

Use of Funds

Administration – DECD Legal Fees	$3,000
Architectural & Engineering	$27,000
Construction	$345,000
Total	**$375,000**

** The figures above may be amended from time to time through requests for revisions to the Project Financing Plan and Budget, as approved by the Department of Economic and Community Development.*

FINANCIAL ASSISTANCE PROPOSAL

This financial assistance proposal is based upon the commitment of the Town of Trumbull (hereafter, the "Applicant"), to implement the project as described herein. The State of Connecticut, acting through the Department of Economic and Community Development (hereafter, "DECD") and under the provisions of the C.G.S. Sec. 4-66c (for Urban Act) proposes a financial assistance package consisting of a grant in the total amount of $375,000. DECD financial assistance shall not exceed $375,000 of the total project cost as described in this proposal, whichever is less, as set forth in the most recently approved Project Financing Plan and Budget. The components of this financial assistance are outlined below:

Applicant:	Town of Trumbull	
DECD Financing:	$375,000	Grant
Amount and Use of DECD Funds:	$345,000	Construction
	$ 27,000	Architectural & Engineering
	$ 3,000	Administration – DECD Legal Fees
	$375,000	**TOTAL**

BACKGROUND

Applicant Description: The Town of Trumbull is located in Fairfield County. The Town offers a centralized location where municipal buildings, retail and restaurants are found. The Town spans an area of 23 square miles, with a population of about 36,000. Trumbull was incorporated in 1797 and named for the Revolutionary War Governor Jonathan Trumbull.

Project Description: State Urban Act (OPM) grant funds of $375,000 will be used by the Town of Trumbull for safety and lighting upgrades to the Hillcrest Middle School pool. The Hillcrest pool is a municipally owned, operated and maintained recreation facility located within the Town of Trumbull.

SOURCE AND USE OF FUNDS

Sources of Funds

Department of Econ. and Comm. Develop. –Urban Act	$375,000
Total	**$375,000**

Use of Funds

Administration – DECD Legal Fees	$3,000
Architectural & Engineering	$27,000
Construction	$345,000
Total	**$375,000**

** The figures above may be amended from time to time through requests for revisions to the Project Financing Plan and Budget, as approved by the Department of Economic and Community Development.*

FINANCIAL ASSISTANCE PROPOSAL

This financial assistance proposal is based upon the commitment of the Town of Trumbull (hereafter, the "Applicant"), to implement the project as described herein. The State of Connecticut, acting through the Department of Economic and Community Development (hereafter, "DECD") and under the provisions of the C.G.S. Sec. 4-66c (for Urban Act) proposes a financial assistance package consisting of a grant in the total amount of $375,000. DECD financial assistance shall not exceed $375,000 of the total project cost as described in this proposal, whichever is less, as set forth in the most recently approved Project Financing Plan and Budget. The components of this financial assistance are outlined below:

Applicant:	Town of Trumbull	
DECD Financing:	$375,000	Grant
Amount and Use of DECD Funds:	$345,000	Construction
	$ 27,000	Architectural & Engineering
	$ 3,000	Administration – DECD Legal Fees
	$375,000	**TOTAL**

ENVIRONMENTAL COMPLIANCE

Connecticut Environmental Policy Act (Consult with ORD)

Disbursement of state funds may be subject to the completion of the appropriate Connecticut Environmental Policy Act ("CEPA") review of project activities. If project analysis and review under the provisions of CEPA is necessary, then DECD will contract a professional engineering/planning firm experienced in preparing CEPA documents, using funds appropriated to the project. Said firm shall work at the direction of the DECD in assessing the project activities in accordance with CEPA (C.G.S. Sec. 22a-1 and R.C.S.A. Sec. 22a-1a-1 to 22a-1a-12).

Environmental Condition of the Real Property (Consult with ORD)

As determined by DECD, the environmental site assessments, survey, reports and remedial action plans will be prepared for real property subject to project activities. A professional firm licensed to practice in the State of Connecticut shall prepare the reports. The scope of investigations and report shall conform to the applicable Department of Environmental Protection laws and regulations, and the applicable American Standards for Testing Materials document standards. Copies of all reports shall be made available to DECD.

If the Applicant and/or other parties for the subject properties within the project area have conducted Environmental Site Assessments, copies of such documents must be submitted to DECD.

CONSTRUCTION COMPLIANCE (Consult with ORD)

The DECD requires submission of project design documents, specifications, construction bid documents and cost estimates and other documents outlined in Schedule A. All submissions are subject to review, comment, and/or approval by the DECD's Office of Responsible Development and/or the DECD Commissioner.

The Applicant shall submit for review and comment the following construction-related documents: a) bid package(s) including procedures for bidding; b) bid selection process and results; c) bonding and insurance requirements; d) copies of contracts; e) updated list of project contractors; f) schedule of values; g) payment requisitions and change orders.

DECD requirements for approval of the release of funds for construction include review of construction documents, latest updated budget, submittal of bidding process, project schedule and cash flow updates, monthly reports, and any appropriate back up materials as may be needed for review such as application and certificate of payment (AIA Document G702) approved by the architect and/or engineer, appropriate invoices, etc.

REPORTING

Project Audit

Each Applicant subject to a federal and/or state single audit must have an audit of its accounts performed annually (see Schedule B). The audit shall be in accordance with the DECD Audit Guide (located at http://www.ct.gov/ecd/cwp/view.asp?a=1096&q=249676)

and the requirements established by federal law and state statute. All Applicants not subject to a federal and/or state single audit shall be subject to a Project-specific audit of its accounts within ninety (90) days of the completion of the Project or at such times as required by the Commissioner. Such audit shall be in accordance with the DECD Audit Guide. An independent public accountant as defined by generally accepted government-auditing standards (GAGAS) shall conduct the audits. At the discretion and with the approval of the Commissioner, examiners from the Department of Economic and Community Development may conduct Project-specific audits.

The completion of the project will be determined by the end date of the most recently approved Project Financing Plan and Budget.

Semi-Annual Project Financial Statements
The Applicant will also be required to provide unaudited Balance Sheet and cumulative Statement of Program Cost to the Commissioner in the approved DECD project statement format as outlined in the most current Accounting Manual located at http://www.ct.gov/ecd/cwp/view.asp?a=1096&q=249670 (see accounting manual financial statements). This information shall be due within 30 days after June 30th and December 31st until the Project Financing Plan and Budget expires.

REQUIRED DOCUMENTS

The Applicant must provide the following required documents prior to contract closing. No financial assistance agreements will be signed by DECD until all required documents have been received, which include the following:

- Environmental reports, as required
- Certified Resolution

PROJECT START/END DATE

For purposes of this proposal this project will have a start date of December 22, 2010, and any eligible Applicant project expenditures after that date will be permitted as part of the project. The end date of the project will be determined by the most recently approved Project Financing Plan and Budget.

EXPIRATION

The Applicant must accept this proposal no later than 30 calendar days after the date of proposal. In the event the DECD does not receive the acceptance of this proposal by the aforementioned date, the offer will be considered null and void and withdrawn.

INSTANCES OF DEFAULT

If funding for the project is approved, the Assistance Agreement between DECD and the Applicant may be subject, but not limited to the following default provisions: breach of agreement, misrepresentation, receivership or bankruptcy, condemnation or seizure, lack of adequate security, violation of terms in other project documents. In addition to repayment in full of the funding, DECD's remedies may include, but not be limited to, the ability to collect an additional 5% in liquidated damages on the total amount of financial assistance, and to charge a 15% per annum rate of interest on financing provided.

CLOSING AND TRANSACTION COSTS

The Applicant shall be responsible for the payment of all necessary and appropriate costs associated with this transaction, whether or not a closing takes place, including but not limited to the State's attorneys fees and other such costs incurred by the State or associated with securing the State Financial Assistance. Such costs may also include reasonable attorney fees, appraisal costs, and other possible fees and costs related to the closing. No financing will be provided until the Applicant has paid DECD's legal fees.

LABOR COMPLIANCE

Nondiscrimination

The Applicant will comply with Connecticut General Statutes section 4a-60, as may be amended, which prohibits the Applicant from discriminating or permitting discrimination against any person or group of persons on the grounds of race, color, religious creed, age, marital status, national origin, ancestry, sex, mental retardation, mental disability, or physical disability, including, but not limited to, blindness, unless it is shown by such contractor that such disability prevents performance of the work involved, in any manner prohibited by the laws of the United States or of the State of Connecticut.

The Applicant will comply with Connecticut General Statutes section 4a-60a, as may be amended, which prohibits the Applicant from discriminating or permitting discrimination against any person or group of persons on the grounds of sexual orientation.

Affirmative Action

The Applicant will comply with Connecticut General Statutes Section 4a-60, which prohibits the Applicant from engaging in or permitting discrimination in the performance of the work involved as well as requires that the company take affirmative action to ensure that all job applicants with job related qualifications are employed and that employees are, when employed, treated in a nondiscriminatory manner.

Executive Order Number Three

The Applicant will comply with Executive Order Number Three, which gives the State Labor Commissioner continuing jurisdiction over Agreement performance in regard to nondiscrimination. It empowers the State Labor Commissioner to cancel, terminate or suspend the Assistance Agreement for violation of or noncompliance with the order or any state or federal law concerning nondiscrimination.
http://www.cslib.org/exeorder3.htm

Executive Order Number Sixteen

The Applicant will comply with Executive Order Number Sixteen, of Governor John G. Rowland promulgated August 4, 1999, regarding Violence in the Workplace Prevention. The Assistance Agreement may be cancelled, terminated or suspended by the State for violation or noncompliance with said Executive Order No. Sixteen.
http://www.ct.gov/governorrowland/cwp/view.asp?A=1328&Q=255942&pp=12&n=1

Executive Order Number Seventeen

The Applicant will comply with Executive Order Number Seventeen, which gives the State Labor Commissioner and DECD joint and several jurisdiction in respect to

Agreement performance in regard to listing all employment openings with the Connecticut Employment Service. http://www.cslib.org/exeorder17.htm

WITHDRAWAL OF FINANCIAL ASSISTANCE PROPOSAL

Notwithstanding any other provisions of this proposal, the State, in its discretion, may elect to withdraw this proposal and withhold payment of funds if:

- The Applicant shall have made to the State any material misrepresentation in the project data supporting the funding request, in the application or any supplement thereto or amendment thereof, or thereafter in the agreement, or with respect to any document furnished in connection with the project; or
- The Applicant shall have abandoned or terminated the project, or made or sustained any material adverse change in its financial stability and structure, or shall have otherwise breached any condition or covenant, material or not, in this proposal and/or thereafter in the agreement.

ADDITIONAL TERMS AND CONDITIONS

The Applicant acknowledges that the obligation of DECD to provide the financial assistance set forth herein is subject to the normal State approval process, including but not limited to approval by the State Bond Commission, and may be subject to review and approval of any documentation by the Attorney General as to form and substance.

The State financial assistance will be subject to the standard terms and conditions established by DECD for financial assistance under the Sec. 4-66c of the Connecticut General Statutes. The Applicant will enter into an Assistance Agreement with the State of Connecticut, acting through DECD, which will contain but not be limited to provisions of this proposal, and set forth the terms and conditions of the state financial assistance, and will execute and/or deliver such other documents, agreements, and instruments as DECD may require in connection with the State financial assistance or any required security.

This proposal is not a contract by the State of Connecticut or the Applicant. The State shall not be bound until a contract has all approvals required by law, and is executed in accordance with all applicable State procedures.

DECD CONTACTS

Development Manager: Your Development manager is responsible for coordinating all aspects of your project as it moves forward. Please consider the development manager as your main point of contact throughout the life of your project.

Contact: Sheryl Pearson Phone #: **860-270-8096**

Community Development Director: Your Director is also available to you at any time for issues pertaining to all aspects of your project.

Contact: Sheila Hummel Phone #: **860-270-8105**

Office of Responsible Development Contact: The Engineer assigned to your project is available to you at any time for issues concerning construction and environmental questions.

Contact: Nelson Tereso Phone #: **860-270-8213**

CLIENT OBLIGATION CHECKLIST

The following is a brief outline of the documents that will be required to be provided by the municipality over the life of the agreement. This is not an attempt to define all of the terms and conditions as outlined in this proposal, but to provide a snapshot of the requirements.

		YEARS										
General Requirement	**Comment**	**1**	**2**	**3**	**4**	**5**	**6**	**7**	**8**	**9**	**10**	**Status**
State Single Audit (if applicable for non-profits/municipalities) – See Schedule B	Due within 180 days of FYE until all project funds are expended	X	X									
Unaudited balance sheet and Cumulative Statement of Program costs	Due every six months until project is complete	X	X									

Applicant Initials

4-13-11
Date