Planning and Zoning Department
Telephone (203) 452-5044
Fax (203) 452-5169

Town of Trumbull
CONNECTICUT

Town Hall
5866 Main Street
Trumbull, Connecticut 06611

PLANNING AND ZONING COMMISSION

To: MEMBERS OF THE PLANNING AND ZONING COMMISSION
RE: SPECIAL MEETING – **THURSDAY, SEPTEMBER 3, 2020**

The Planning and Zoning Commission will hold a Special Meeting on Thursday, September 3, 2020 at 7:00 p.m. via videoconferencing.

AGENDA

PUBLIC HEARING
7:00 P.M.

PLEDGE OF ALLEGIANCE

ROLL CALL

PUBLIC HEARING

SPECIAL PERMIT/SITE PLAN/ZONE CHANGE/OTHER

1. **5065 and 5085 Main Street:** Applicants, K&K Developers, Inc., Trumbull Shopping Center #2, LLC and WEA CT Houses LLC are requesting a Special Permit with a site plan to allow a proposed 260 unit multi-family residential community and associated site improvements pursuant to Art. II, Sec. 3.4, of the Town of Trumbull Zoning Regulations. **File #20-04** (*Continued from PZC July 15, 2020 Special Meeting and August 19, 2020 Regular Meeting).*

Join the meeting online:
https://zoom.us/j/91382277383?pwd=QnJ2Z3kvS0JpTlI0WU5LOHJiQ3Njdz09
Webinar ID: 913 8227 7383

Password: 16663
Join by telephone:
(312) 626-6799 or (833) 548-0282 (Toll Free)
Webinar ID: 913 8227 7383

Dated at Trumbull, CT this 26th day of August, 2020.

By: Linda Finger, Clerk

Plans for the above listed application are on file for public inspection in the office of the Planning and Zoning Commission and online on the Town of Trumbull website. **

> ***Note for documents posted to the Town website*: *Only new documents submitted since the August 19, 2020 Regular Meeting are included and posted with this Agenda for the September 3, 2020 Special Meeting. In order to view all documents submitted for File #20-04, please also see the Agendas posted for the July 15, 2020 Special Meeting and the August 19, 2020 Regular Meeting.*

COMMISSION MEMBERS: PLEASE NOTIFY Linda Finger, Clerk, AT 203-452-5044 or lfinger@trumbull-ct.gov, IF YOU ARE UNABLE TO ATTEND.

Architecture
Engineering
Environmental
Land Surveying

BL Companies

355 Research Parkway
Meriden, CT 06450
(203) 630-1406
(203) 630-2615 Fax

Garden Homes

ROSE EQUITIES
Owner-Builders since 1949

STATE OF CONNECTICUT
CHRISTOPHER D. GAGNON
No. 28798
LICENSED
PROFESSIONAL ENGINEER

THE RESIDENCES AT MAIN
K & K DEVELOPERS, INC.

5085 MAIN STREET
TRUMBULL, CONNECTICUT

REVISIONS

No.	Date	Desc.
1.	6/30/2020	REVISED PER STAFF COMMENTS
2.	8/10/2020	REVISED PER STAFF COMMENTS

Designed	A.T.K.
Drawn	A.T.K.
Reviewed	J.J.S.
Scale	1"=40'
Project No.	1800513
Date	05/28/2020
CAD File:	SP180051301-COLOR

Title

RENDERED SITE PLAN

Sheet No.

EXH-1

© 2020 BL COMPANIES, INC. THESE DRAWINGS SHALL NOT BE UTILIZED BY ANY PERSON, FIRM OR CORPORATION WITHOUT THE SPECIFIC WRITTEN PERMISSION OF BL COMPANIES.

Architecture
Engineering
Environmental
Land Surveying

BL Companies

355 Research Parkway
Meriden, CT 06450
(203) 630-1406
(203) 630-2615 Fax

Garden Homes

ROSE EQUITIES
Owner-Builders since 1949

STATE OF CONNECTICUT
CHRISTOPHER D. GAGNON
No. 28798
LICENSED
PROFESSIONAL ENGINEER

THE RESIDENCES AT MAIN
K & K DEVELOPERS, INC.

5085 MAIN STREET
TRUMBULL, CONNECTICUT

REVISIONS

No.	Date	Desc.
1.	6/30/2020	REVISED PER STAFF COMMENTS
2.	8/10/2020	REVISED PER STAFF COMMENTS

Designed	A.T.K.
Drawn	A.T.K.
Reviewed	J.J.S.
Scale	1"=40'
Project No.	1800513
Date	05/28/2020
CAD File:	SP180051301-COLOR

Title

RENDERED SITE PLAN

Sheet No.

EXH-1

© 2020 BL COMPANIES, INC. THESE DRAWINGS SHALL NOT BE UTILIZED BY ANY PERSON, FIRM OR CORPORATION WITHOUT THE SPECIFIC WRITTEN PERMISSION OF BL COMPANIES.

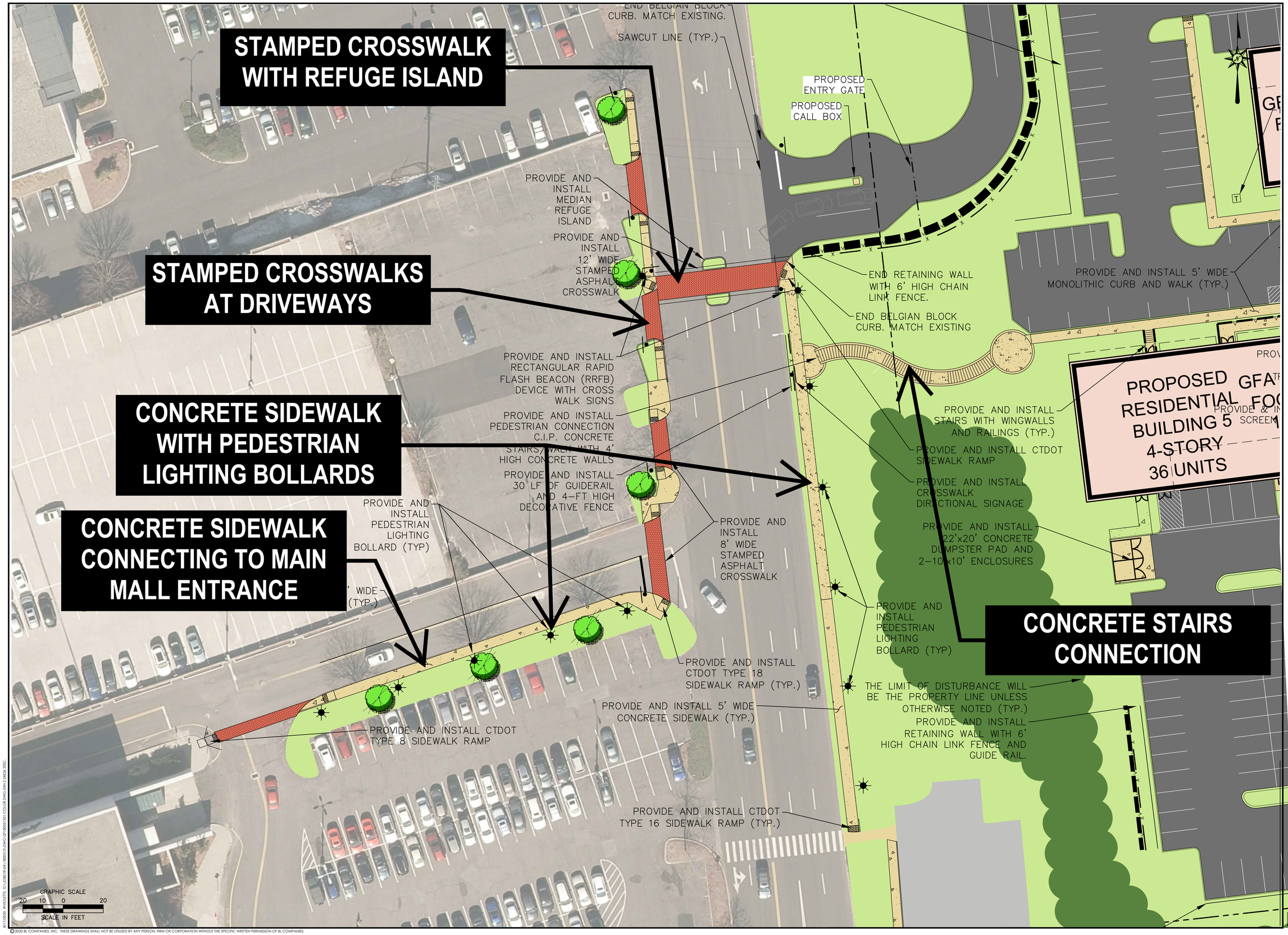

Architecture
Engineering
Environmental
Land Surveying

BL Companies

355 Research Parkway
Meriden, CT 06450
(203) 630-1406
(203) 630-2615 Fax

Garden Homes

ROSE EQUITIES
Owner-Builders since 1949

STATE OF CONNECTICUT
CHRISTOPHER D. GAGNON
No. 26798
LICENSED
PROFESSIONAL ENGINEER

THE RESIDENCES AT MAIN
K & K DEVELOPERS, INC.
5085 MAIN STREET
TRUMBULL, CONNECTICUT

REVISIONS

No.	Date	Desc.
1.	6/30/2020	REVISED PER STAFF COMMENTS
2.	8/10/2020	REVISED PER STAFF COMMENTS

Designed	A.T.K.
Drawn	A.T.K.
Reviewed	J.J.S.
Scale	1"=20'
Project No.	1800513
Date	05/28/2020
CAD File:	SP180051301-COLOR

Title

RENDERED SITE PLAN

Sheet No.

EXH-2

© 2020 BL COMPANIES, INC. THESE DRAWINGS SHALL NOT BE UTILIZED BY ANY PERSON, FIRM OR CORPORATION WITHOUT THE SPECIFIC WRITTEN PERMISSION OF BL COMPANIES.

ILLUSTRATIVE SITE ELEVATION A BUILDING 2 - NORTHERN FACADE

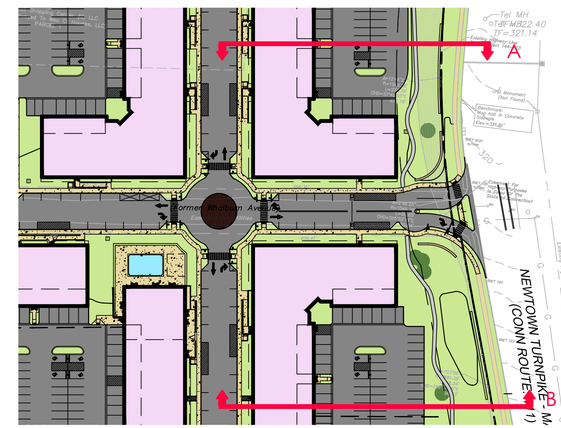

SECTION KEY MAP

ILLUSTRATIVE SITE ELEVATION B BUILDING 3 - SOUTHERN FACADE

NOT FOR CONSTRUCTION
FOR PERMITTING PURPOSES ONLY

© 2020 BL COMPANIES, INC. THESE DRAWINGS SHALL NOT BE UTILIZED BY ANY PERSON, FIRM OR CORPORATION WITHOUT THE SPECIFIC WRITTEN PERMISSION OF BL COMPANIES.

Architecture
Engineering
Environmental
Land Surveying
BL Companies
355 Research Parkway
Meriden, CT 06450
(203) 630-1406
(203) 630-2615 Fax

Garden Homes

ROSE EQUITIES
Owner-Builders since 1949

STATE OF CONNECTICUT
CHRISTOPHER D. GAUDIO
No. 28798
LICENSED
PROFESSIONAL ENGINEER

THE RESIDENCES AT MAIN
K & K DEVELOPERS, INC.
5085 MAIN STREET
TRUMBULL, CONNECTICUT

REVISIONS

No.	Date	Description
1.	6/30/2020	REVISED PER STAFF COMMENTS
2.	8/10/2020	REVISED PER STAFF COMMENTS

Designed	A.T.K.
Drawn	A.T.K.
Reviewed	J.J.S.
Scale	NTS
Project No.	1800513
Date	05/28/2020

CAD File: PB-CS180051301

Title
ILLUSTRATIVE SITE ELEVATIONS

Sheet No.
CS-1

8/17/2020, WWOLCOTTE, G:\JOBS\18-JOB\1800513\DWG\PB-CS180051301.DWG-CS-1

ILLUSTRATIVE SITE ELEVATION PEDESTRIAN CONNECTION TO RING ROAD & MALL

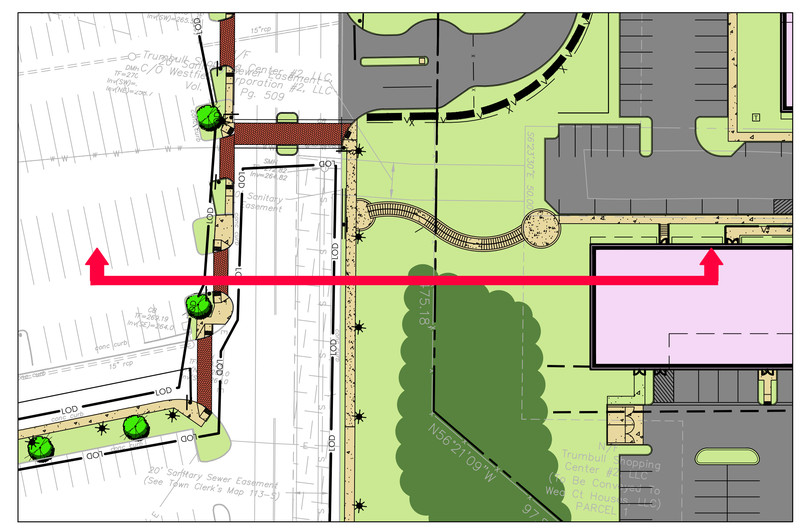

SECTION KEY MAP

NOT FOR CONSTRUCTION
FOR PERMITTING PURPOSES ONLY

© 2020 BL COMPANIES, INC. THESE DRAWINGS SHALL NOT BE UTILIZED BY ANY PERSON, FIRM OR CORPORATION WITHOUT THE SPECIFIC WRITTEN PERMISSION OF BL COMPANIES.

BL Companies
Architecture
Engineering
Environmental
Land Surveying

355 Research Parkway
Meriden, CT 06450
(203) 630-1406
(203) 630-2615 Fax

Garden Homes

ROSE EQUITIES
Owner-Builders since 1949

THE RESIDENCES AT MAIN
K & K DEVELOPERS, INC.
5085 MAIN STREET
TRUMBULL, CONNECTICUT

REVISIONS

No.	Date	Desc.
1.	6/30/2020	REVISED PER STAFF COMMENTS
2.	8/10/2020	REVISED PER STAFF COMMENTS

Designed	A.T.K.
Drawn	A.T.K.
Reviewed	J.J.S.
Scale	NTS
Project No.	1800513
Date	05/28/2020
CAD File:	PB-CS180051301

Title
ILLUSTRATIVE SITE ELEVATIONS

Sheet No.
CS-2

WESTERN ACCESS DRIVE - FULL ACCESS

1"=20'

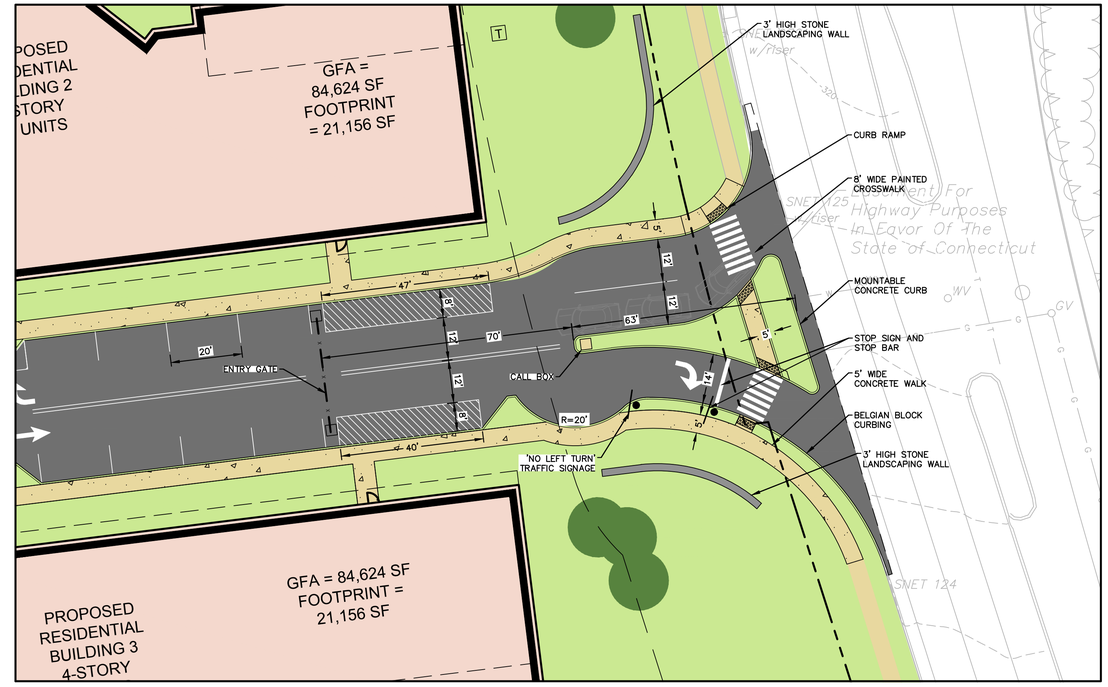

EASTERN ACCESS DRIVE

1"=20'

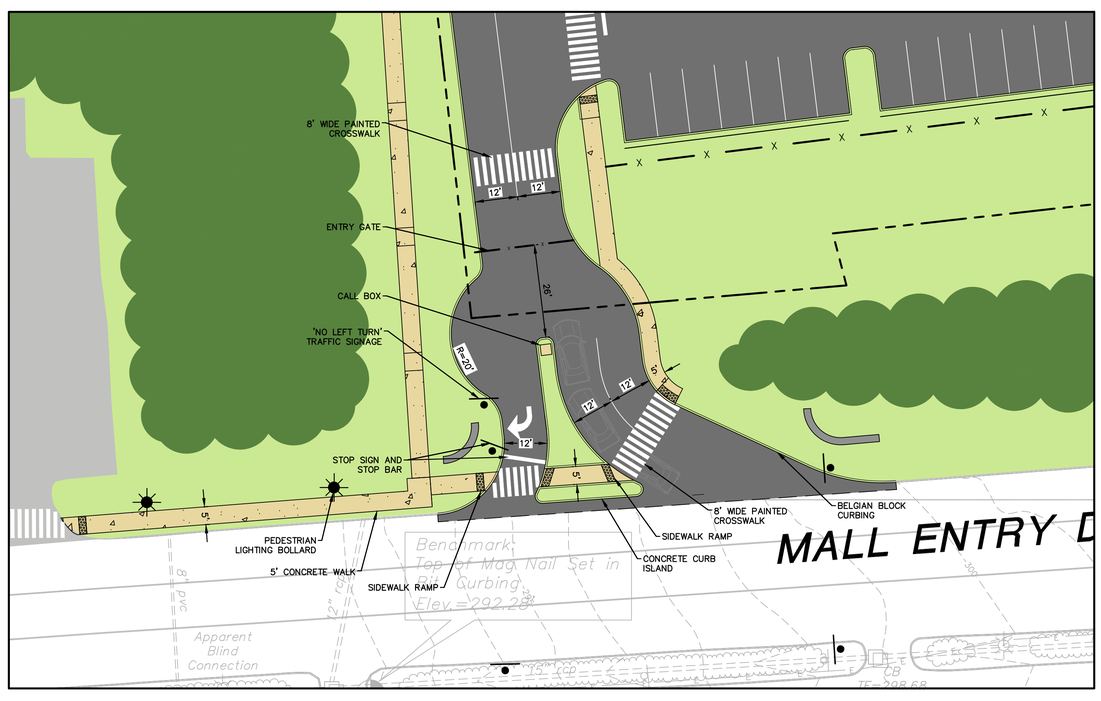

SOUTHERN ACCESS DRIVE

1"=20'

GRAPHIC SCALE

20 10 0 20

SCALE IN FEET

© 2020 BL COMPANIES, INC. THESE DRAWINGS SHALL NOT BE UTILIZED BY ANY PERSON, FIRM OR CORPORATION WITHOUT THE SPECIFIC WRITTEN PERMISSION OF BL COMPANIES.

Architecture
Engineering
Environmental
Land Surveying

BL Companies

355 Research Parkway
Meriden, CT 06450
(203) 630-1406
(203) 630-2615 Fax

Garden Homes

ROSE EQUITIES
Owner-Builders since 1949

THE RESIDENCES AT MAIN
K & K DEVELOPERS, INC.

5085 MAIN STREET
TRUMBULL, CONNECTICUT

REVISIONS

No.	Date	Desc.
1.	6/30/2020	REVISED PER STAFF COMMENTS
2.	8/10/2020	REVISED PER STAFF COMMENTS

Designed	A.T.K.
Drawn	A.T.K.
Reviewed	J.J.S.
Scale	1"=20'
Project No.	1800513
Date	05/28/2020
CAD File:	SP180051301-COLOR

Title

RENDERED ACCESS DRIVE EXHIBIT

Sheet No.

EXH-7

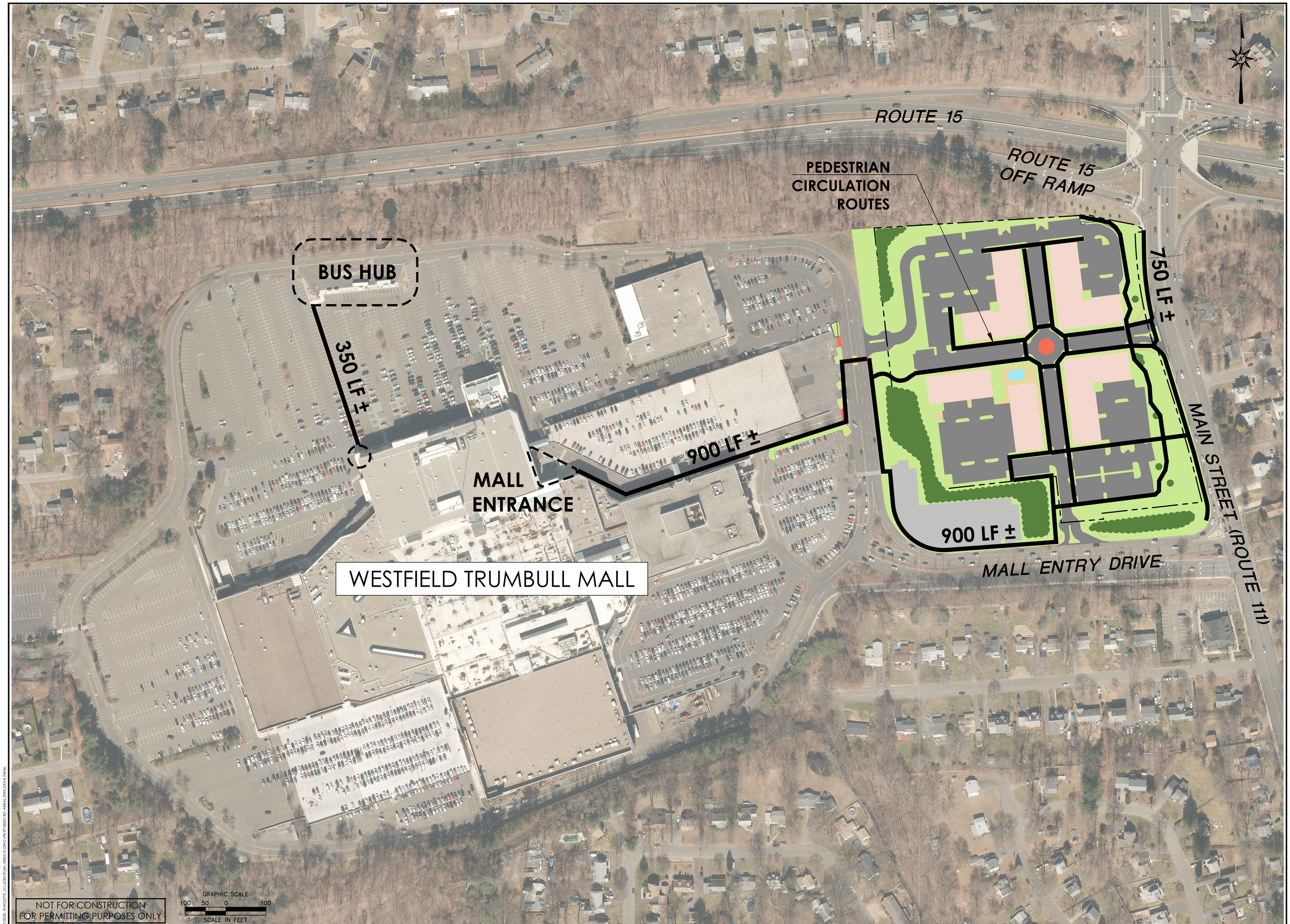

Architecture
Engineering
Environmental
Land Surveying

BL Companies

355 Research Parkway
Meriden, CT 06450
(203) 630-1406
(203) 630-2615 Fax

Garden Homes

ROSE EQUITIES
Owner-Builders since 1949

STATE OF CONNECTICUT
CHRISTOPHER D. GAGNON
No. 25798
LICENSED
PROFESSIONAL ENGINEER

THE RESIDENCES AT MAIN
K & K DEVELOPERS, INC.
5085 MAIN STREET
TRUMBULL, CONNECTICUT

REVISIONS

No.	Date	Desc.
1.	6/30/2020	REVISED PER STAFF COMMENTS
2.	8/10/2020	REVISED PER STAFF COMMENTS

Designed	A.T.K.
Drawn	A.T.K.
Reviewed	J.J.S.
Scale	1"=100'
Project No.	1800513
Date	05/28/2020

CAD File:
PB-SP180051301-AERIAL

Title

PEDESTRIAN CIRCULATION PLAN

Sheet No.

EXH-8

8/17/2020, WWOLETTE, G:\JOBS18\04\1800513\DWG\PB-SP180051301-AERIAL.DWG EXH-8 24X36.

© 2020 BL COMPANIES, INC. THESE DRAWINGS SHALL NOT BE UTILIZED BY ANY PERSON, FIRM OR CORPORATION WITHOUT THE SPECIFIC WRITTEN PERMISSION OF BL COMPANIES.

K&K Developers, Inc., Trumbull Shopping Center #2, LLC and WEA CT Houses LLC
Responses to P&Z Commission's Questions
July 15, 2020 Public Hearing

The Applicants are pleased to offer the following responses to the questions posed by the members of the Trumbull Planning & Zoning Commission during the July 15, 2020 portion of the public hearing. The Applicants' response is set forth immediately after each question.

The Applicants appreciate the Commission's careful review of its proposal and the questions the members have posed. The Applicants have taken the Commission's questions and concerns to heart, and have made substantial changes in the design of various components of the community, as discussed specifically below.

Several of the responses refer to revised site plans that submitted in simultaneously with this memo together with other supplementary materials that better depict important elements of the proposed community and its connection to the Westfield Trumbull mall.

Commission Questions:

Commissioner D'Quila:

Q: On the E/W road, how does one get from the community to the mall?
A: The internal road heading west toward the mall terminates at the edge of the slope. Drivers seeking to travel to the mall will turn right (heading north) and access the proposed driveway connection that leads to the ring road. Pedestrians will travel down the proposed staircase leading to the crosswalk across the ring road.

Q: If parents drive to bus stop, where will they park?
A: Given the very close proximity of the buildings to the curb cut on Main Street (the location of the school bus stop), it is very unlikely that parents will drive the extremely short distance to that area. Nevertheless, because the spaces perpendicular to Main Street near Building #3 will likely be empty during the school drop-off/pick-up hours, there will be parking available for parents.

Q: Will there be local bus service available in close proximity to the Residences or will residents need to walk to the bus stops on the mall property?
A: The applicants have been in contact with Doug Holcomb, Chief Executive Officer and Steven DeMichele, Director of Planning and Service Development for Greater Bridgeport Transit ("GBT") in order to investigate the opportunity of providing a bus stop in closer proximity to the Residences. An email from Mr. Holcomb provides that GBT is "interested in placing a stop and would like to work with the mall and developer."

Commissioner Silber:

Q: If a tenant rents a garage, how will you prevent other tenants from blocking space behind it?
A: Tenants who rent a garage will also be assigned a numbered spot immediately behind it. Signage will provide that all numbered spots are reserved. This format is utilized in many multi-family communities without incident.

Q: Will the proposed light fixtures shine into units?
A: No. All lighting fixtures will be full cut-off and no light will shine into units.

Q: Will sidewalks be provided for entire length?
A: Yes. Sidewalks are provided throughout the community as a "town center" type community. The sidewalk system links to the staircase leading the ring road crosswalk. The plans have also been revised to include an accessible sidewalk from the Residences to the ring road crosswalk. In addition, a walking path has been added on the inside of the stone walls along Main Street, which is also depicted on the revised site plans.

Q: What kind of sound buffering is provided by evergreens?
A: The proposed evergreens along the northern edge of the property will provide both a visual and auditory buffer to the community. A precise determination of the diminution in decibel levels provided by the buffering cannot be determined, but whenever designing a new community, the developer of the Residences takes into account the surrounding environment and increases sound attenuation through its choice of building materials, and will do so here. In addition, the character of the sound from the Parkway is fundamentally different than from a highway where trucks are permitted, such as I-95, particularly during the nighttime hours.

Q: How safe is it for pedestrians to cross the ring road? Is it sufficient with just flashers? Is anything else needed?
A: The applicants and their professionals are fully confident that the proposed crosswalk will be safe for pedestrians. A new cross-section and other materials have been provided with this memo to better depict the variety of features that are proposed to ensure pedestrians' safety. The crosswalk has been revised to provide a median refuge area to decrease the crossing distance across the ring road. The crosswalk area includes high-visibility paint and rectangular rapid flashing beacons with advanced warning signage. These elements are proven safety countermeasures by the Federal Highway Administration.

Q: What is URW's five-year plan for the mall itself?
A: As discussed, bricks-and-mortar retail and regional shopping malls are facing unparalleled challenges, first with on-line retailing, and most recently with the pandemic. Accordingly, the Westfield Trumbull mall is at a crossroads, and approval of the proposed Residences is a crucial first step in any positive evolution of the mall. URW is constantly reviewing opportunities to continue to transform the mall experience through the continued introduction of new and diverse uses to Westfield Trumbull. In particular, with the instability in the department store industry, URW is focused on how to best to repurpose the spaces they currently occupy with fresh and diverse uses to solidify Trumbull as a destination to live, work,

and play. The introduction of residential today represents a substantial investment in the overall property and the Town of Trumbull, and allows URW certainty in future planning for the reuse and reconfiguration of the site.

Commissioner Chory:

Q: How many students use other Main Street bus stops in area? How will this compare?
A: The number of students varies from year to year and by level of school (elementary, middle, and high). The Trumbull Board of Education Transportation Department carefully staggers the pick-up and drop-off times for the three different types of schools such that only one bus will be stopping at a time.

Q: How will the applicants address COVID impacts regarding elevator use, shared spaces, etc.?
A: All of the applicants' other communities are following all requirements for such spaces issued by each individual jurisdiction and the Centers for Disease Control, including the use of masks in public spaces such as hallways, elevators, leasing offices and the like, as well as reducing the capacity of other spaces open to multiple residents.

Commissioner Pruesh:

Q: Will Stanley A. Gniazdowski present to the Commission?
A: Mr. Gniazdowski will be available at the August 19 hearing.

Commissioner Garrity:

Q: Will the left turn in from Main Street be eliminated?
A: Yes, the left turn into the Residences from northbound Main Street has been eliminated, as depicted on the revised site plans and in the Traffic Analysis Addendum.

Q: Please provide details on queuing at the three entrances and the ability for drivers to turn around.
A: First, the proposed community has three entrances offering residents and visitors alternatives in the very unlikely event that one entrance has a queue. Second, a revised site plan has been submitted detailing – at each entrance - an additional "fast pass" lane for residents, and sufficient room for motorists to turn around. Based upon the applicants' extensive experience at its other communities, no queuing is expected at any of the entrances. Further, the elimination of the left turn into the site further minimizes the possibility of queues at the Main Street entrance.

Q: Can the access drive where it intersects with the ring road can be modified?
A: No revision of the signalized intersection of the main access drive and the ring road is necessary or proposed. There is no history of traffic accidents in that vicinity that would necessitate such a modification. This intersection is signalized and it therefore provides drivers with the ability to navigate that area while all other traffic is stopped. In addition, the hours of the morning during which residents will be departing the property are those when the mall is closed or when it is least busy.

Q: How will residents exit the site to get to Main Street – will they make U-turns at the end of access drive?
A: Most drivers will utilize the access on the western side of the community leading to the ring road. To the extent that some residents elect to make a U-turn at the signalized intersection, they will do so under a green condition while all other traffic is stopped. That movement is currently permitted and only one accident has occurred at that location over the past three years.

Q: How can we improve walkability? Many residents will likely want the opportunity to take a walk, particularly in the evening.
A: In addition to the ability to walk throughout the community, down to the mall, and in the residential areas to the north and the east, the applicants have submitted a revised landscape plan that depicts a walking path along the interior of the stone walls adjacent to Main Street that connects to the overall sidewalk plan.

Q: What about biking?
A: Biking is encouraged through the provision of interior bike racks in each building.

Commissioner Laconte:

Q: Why haven't you provided a generator for each building? Will a generator be provided for elevators and hallway lighting?
A: Because each unit is separately metered, there would need to be a separate generator for each unit, which is clearly never done in any multi-family community. While there is no building code or zoning regulation requirement for a generator for the residential buildings, the building code does require emergency lighting in the event of a power outage so residents may safely exit the building if necessary. Nevertheless, the Applicants would accept a condition of approval for the provision of a generator for each building for limited common areas.

Staff Questions:

Rob Librandi:

Q: Who is responsible for sidewalk maintenance?
A: The Applicants.

Q: Will there be public bus stop improvements?
A: As noted above, the Applicants are in communication with Greater Bridgeport Transit regarding the addition of a bus stop in closer proximity to the Residences.

Town Engineer William Mauer:

Q: Will the applicants provide a response to the engineering review memo.
A: Yes. A response memo, revised plans, and a revised Stormwater Report have been provided to the Town Engineer. The revised Report provides not only will the rate of runoff from the site be reduced, but the total amount of runoff will be reduced as well.

Good morning.

I am writing in support of the project known as "The Residences at Main", the 260-unit market rate apartments to be built on the land between the Westfield Mall and the Merritt Parkway.

As a member of the Trumbull Board of Finance, I am acutely aware of our town's relatively narrow base of commercial taxpayers. The mall is by far the largest of those taxpayers. No retail entity has undergone more change than malls in the past decade, and very few commercial entities sustained greater losses due to the pandemic. Rather than sitting back and letting changing tastes dictate its fate, the developers are proposing this alternative use of resources while building a hyperlocal consumer base. The Residences at Main will provide a boost to Westfield's bottom line, which is something every taxpayer in Trumbull should support; a successful Westfield is a successful Trumbull.

There have been reasonable concerns from Trumbull residents about the number of children that will live in the proposed apartments and attend Trumbull Public Schools. Trumbull has recent experience with apartments and school enrollment: Ten Trumbull has only 6 school-aged children among the 50 units rented (an average of 0.12 child per unit). So while no study is a crystal ball, the Rutgers study estimating 27 children in the 260 apartments seems reasonable in the context of Trumbull's recent experience and accounting for the larger number of smaller units that would not generally accommodate children (.103 child per unit, 86% of the proportional population of Ten Trumbull).

Every planning and zoning decision involves a series of trade-offs. However, I believe that The Residences at Main are a net positive for our town, and not just because of the c.$900,000 per year in additional projected annual tax revenues. I urge the members of the Commission to support this project. Thank you for all of your diligent work.
Sincerely,
Michael Barker
26 George Street, Trumbull
member, Board of Finance

From: Steven C. Demichele <SDemichele@gogbt.com>
Sent: Thursday, August 27, 2020 4:50 PM
To: Scott Loventhal <ScottL@gardenhomes.com>
Cc: Patrick Madden <patrick.madden@urw.com>; Doug Holcomb <DHolcomb@gogbt.com>; 'JSchmitz@blcompanies.com' <JSchmitz@blcompanies.com>
Subject: RE: Trumbull Westfield Shopping Mall - residential development

Scott,

I have spoken with Doug Holcomb, our GM on this subject and I think we can accommodate two new bus stops for this development. I have copied Doug and John Schmitz, who reached out to Doug on this same subject, to this email.

The image below depicts proposed bus stop locations, with the area shaded in blue being the development area, as I understand it. We certainly can finalize bus stop placement plans as the project moves along.

Best,

From: Scott Loventhal <ScottL@gardenhomes.com>
Sent: Wednesday, August 26, 2020 3:52 PM
To: Steven C. Demichele <SDemichele@gogbt.com>
Cc: Patrick Madden <patrick.madden@urw.com>
Subject: RE: Trumbull Westfield Shopping Mall - residential development

Hi Steven,

I just wanted to circle back with you regarding our e-mail discussion on the possibility of an additional Bus Stop on the east side of the Trumbull Mall in the vicinity of our 260 unit multi-family residential development at the Main St mall entrance.

We are appearing again next Thursday September 3 before the Trumbull Planning & Zoning Commission and I would welcome the opportunity to give them an update on your consideration of this request. While a yes to a stop would be great (with the details to be worked out closer to the projected opening of our Project), we are really not looking for a firm commitment at this time but merely trying to understand the process and to certainly get any preliminary feedback on this request.

Thanks very much.

Scott T. Loventhal
Garden Homes Development
Garden Communities
Garden Commercial Properties
820 Morris Turnpike
Short Hills, NJ 07078
973-467-5000, Ext. 1212
ScottL@gardenhomes.com
www.gardenhomes.com
www.gardencommunities.com
www.gardencommercial.com

Hi I live at Frelma Dr Trumbull,Ct. my name is Sharon Ferrante I am really concern about these apartments being built on Main St. I live close to the Trumbull,Ct. Stop & Shop & work at the Bridgeport,Ct. Stop & Shop 6 minute drive to work Holiday time it can take 15-20 minutes to work or longer traffic backs up all the way to St Theresa's You really cannot judge the traffic now do to the virus and people out of work and schools closed . I'm also worry that the $150.000.00 income is not going to stop parents from renting these apartments for their Sacred Heart University kids. In my brother's neighborhood the north end of Bridgeport these same parents are BUYING the houses there from New York & New Jersey the houses are in the parents names & then renting them to the kids that live with their kids .I know you say there won't be many kids in these apartments overloading our schools But how are you going to control who is renting them There has to be some kind of guarantee that Sacred Heart students will not be occupying these rents Whoever's name is on the lease has to live there no if and or buts AND no sub leasing Thank You Sharon Ferrante

The proposed apartment complex at the mall in Trumbull is essential to the mall's future. As retailers struggle to compete with online competitors, residential units have become a critical piece of the formula. We need Westfield Trumbull to succeed, so I support The Residences at Main.

-Nicholas LeMay
Via email

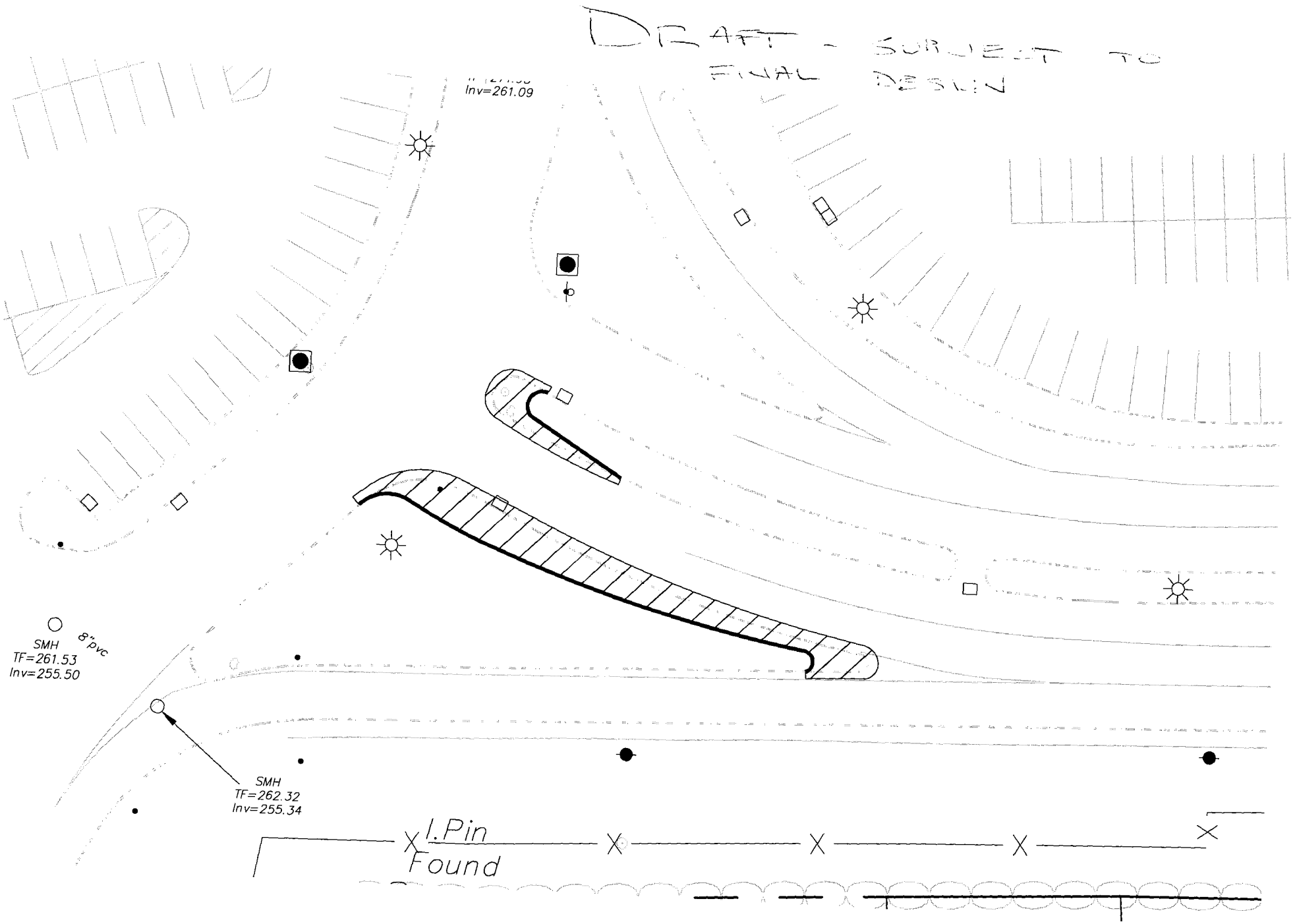
DRAFT - SUBJECT TO FINAL DESIGN
Inv=261.09
SMH
TF=261.53
Inv=255.50
8" PVC
SMH
TF=262.32
Inv=255.34
I.Pin
Found

Mr. Librandi,

I hope all is well. I am writing to you in regards to the proposed Main Street Apartment at the Trumbull Mall. As a resident of the area, I want to strongly oppose them being built in their current form. Our town is:

1. Already in the process of filling brand new apartments ~1 mile away and have not had the time yet to analyze their impact

2. Still determining our strategy for a reasonable budget future given the impact COVID has had

3. In the midst of one of some of the most real estate transfers we have seen in years, with many new families taking over homes occupied by empty nesters

4. Unprepared for an influx of more people, including impacts on infrastructure, business, and mostly schools.

As a town, we have done little to reimagine what the mall space could become, and are taking the easy way out by potentially approving apartments. Once built, there is no going back, and we will be stuck with the outcomes. Until we have the time to complete a full analysis of the impact of 10 Trumbull, my feeling is that any approvals should be paused.

To be clear, I am not against apartments, I am against making decisions with insufficient information. Developers have been wrong on their projections forever, including on the only other apartments built in this area. So unless that will be accounted for and put back on the developer / mall owners (tax increase or max occupancy for example), these should be paused and re-evaluated at a later date.

In that time, perhaps the mall could start think about how to redevelop their space to align to other malls around the country who have increased outdoor spaces, added more varieties of stores, and brought in entertainment that drives foot traffic.

Kind regards,

Rick Southard
35 Deerfield Drive
Trumbull, CT 06611
203-394-3605

Tracy Vonick
155 Killian Ave
Trumbull, CT 06611

TO: P&Z Commission

Re: Development application for 5065 and 5085 Main Street:

Mr Chairman & Commission Members;

Please read and enter into the minutes of the Public Hearing section of the meeting my comments below.

1. As presented, I am not in favor of this application.
2. I hope the P&Z Commission deny this application as presented.
3. The developers have not deed restricted as affordable, any units, thus compounding a problem in getting to even a minimum threshold as stated within CT State Statutes (8-30(g).
4. The developers offer no contractual guarantees as to impact on Town Services (Police, Fire, Education, Sewer, etc)
5. The developers offer no contractual increases in revenue to the Town if their projections are incorrect.

Thank You
Tracy Vonick

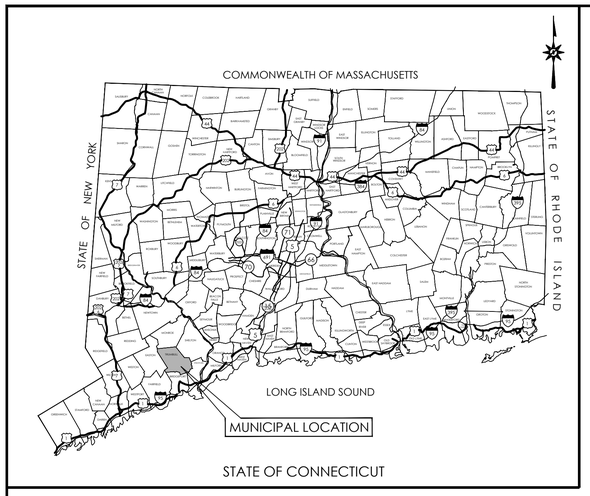

LOCATION MAP

N.T.S.

THE RESIDENCES AT MAIN

THE RESIDENCES AT MAIN
TRUMBULL | CONNECTICUT

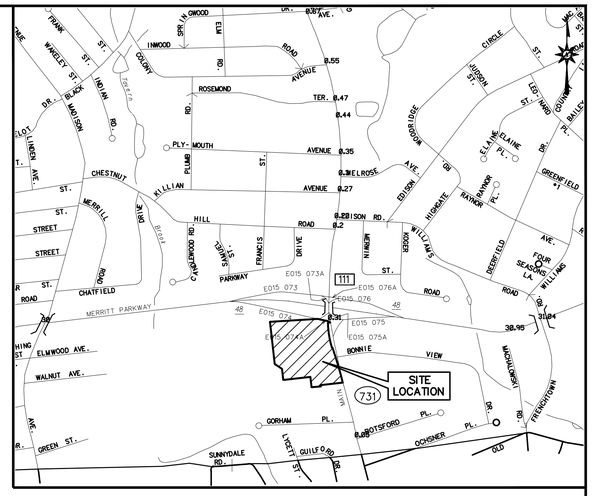

VICINITY MAP

SCALE: 1"=800'

5085 MAIN STREET, LOT E11-70, TRUMBULL, CONNECTICUT

PREPARED FOR:

K & K DEVELOPERS, INC.
C/O GARDEN HOMES DEVELOPMENT
820 MORRIS TURNPIKE,
NEW JERSEY 07078

Garden Homes

ROSE EQUITIES
Owner-Builders since 1949

MINNO WASKO
ARCHITECTS AND PLANNERS
80 LAMBERT LANE, SUITE 100, LAWRENCEVILLE, NEW JERSEY 08530 MINNOWASKO.COM

GEI Consultants

CONTENTS

	TITLE SHEET
EX-1	BOUNDARY/ TOPOGRAPHIC SURVEY
SP-0	OVERALL SITE PLAN
SP-1	SITE PLAN
TT-1,2	TRUCK TURNING PLAN
GD-1, 2	GRADING AND DRAINAGE PLAN
GD-3	STORMWATER POND CROSS SECTION
SU-1	SITE UTILITIES PLAN
EC-1	SEDIMENT AND EROSION CONTROL PLAN
EC-2	SEDIMENT AND EROSION CONTROL NOTES
EC-3, 4	SEDIMENT AND EROSION CONTROL DETAILS
LL-1	LANDSCAPE PLAN
LL-2	LANDSCAPE NOTES AND DETAILS
LP-1	LIGHTING PLAN
GN-1	GENERAL NOTES
DN-1, 2, 3, 4, 5, 6, 7, 8	DETAIL SHEETS

PREPARED BY:

BL Companies
ARCHITECTURE
ENGINEERING
ENVIRONMENTAL
LAND SURVEYING

355 RESEARCH PARKWAY
MERIDEN, CONNECTICUT 06450
(203) 630-1406
(203) 630-2615 Fax

NOT FOR CONSTRUCTION
FOR PERMITTING PURPOSES ONLY

DEVELOPER:

K & K DEVELOPERS, INC.
820 MORRIS TURNPIKE
SHORT HILLS, NJ 07078

OWNER:

WEA CT HOUSES, LLC
2730 UNIVERSITY BLVD., SUITE 900
WHEATON, MD 20902

DATES

ISSUE DATE: MAY 28, 2020
REVISION: AUGUST 10, 2020

CAD FILE: CV180051301
XREF(S): XXXXXXXX

© 2020 BL COMPANIES, INC. THESE DRAWINGS SHALL NOT BE UTILIZED BY ANY PERSON, FIRM OR CORPORATION WITHOUT THE SPECIFIC WRITTEN PERMISSION OF BL COMPANIES.

SITE UTILITIES LEGEND

PROPERTY LINE	
LIMIT OF DISTURBANCE LINE AND CONTRACT LIMIT LINE	LOD
ELECTRIC LINE	E E
ELECTRIC AND TELECOMMUNICATIONS LINES	E/T
GAS LINE	G G
WATER LINE	W W
SANITARY SEWER LINE	S
SANITARY SEWER FORCE MAIN	SFM
OVERHEAD LINE	OH OH
TRANSFORMER	T
HYDRANT	
UTILITY POLE	
SANITARY MANHOLE	
SANITARY CLEANOUT	CO
WATER VALVE	WV
GATE VALVE	GV
THRUST BLOCK	
GREASE TRAP	
OUTLET CONTROL STRUCTURE	
HYDRODYNAMIC SEPARATOR	
STORM LINE	
CATCH BASIN	
STORM MANHOLE	
FLARED END	
END WALL OR HEADWALL	
PROPOSED CONTOUR LINE	228
PROPOSED SPOT GRADE	X 100.00
ABBREVIATIONS – TC=TOP OF CURB – BC=BOTTOM OF CURB – TW=TOP OF WALL – BW=BOTTOM OF WALL	X TC=100.00 BC=99.50 X TW=108.00 BW=100.00
PROPOSED SURFACE SLOPE	2%

NOTES

1. CONTRACTOR SHALL CONFIRM LOCATION, SIZE, CONDITION AND ELEVATION OF ALL EXISTING UTILITY LATERAL STUBS, WATER MAINS, GAS MAINS AND ELECTRICAL SERVICES PRIOR TO CONSTRUCTION.
2. ALL SANITARY MANHOLES AND WATER AND GAS GATES/VALVES TO REMAIN ARE BE RESET TO FINISHED GRADE AS NEEDED.

REFER TO SHEET GN-1 FOR SITEWORK GENERAL NOTES

NOT FOR CONSTRUCTION FOR PERMITTING PURPOSES ONLY

GRAPHIC SCALE
40 20 0 40
SCALE IN FEET

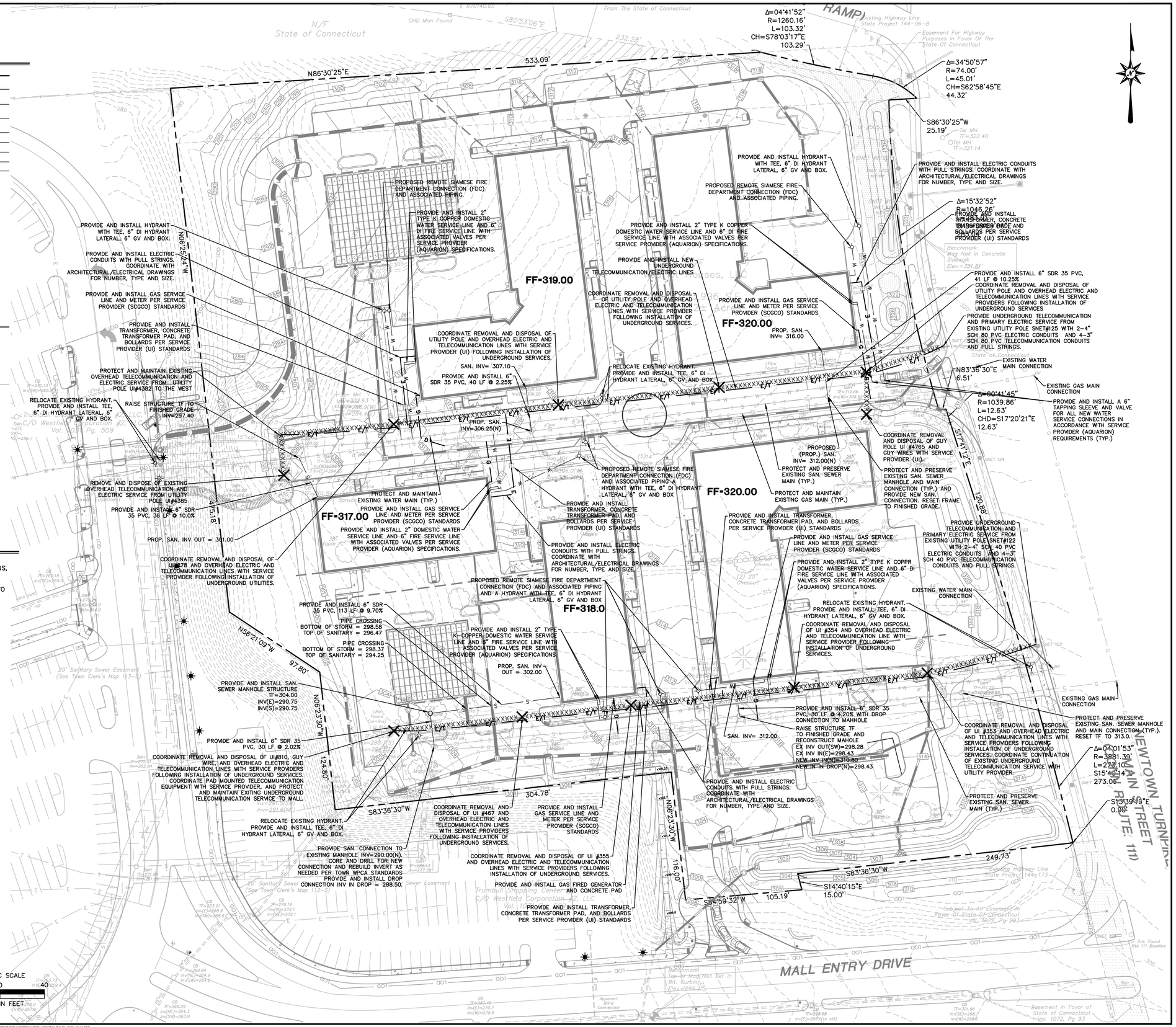

© 2020 BL COMPANIES, INC. THESE DRAWINGS SHALL NOT BE UTILIZED BY ANY PERSON, FIRM OR CORPORATION WITHOUT THE SPECIFIC WRITTEN PERMISSION OF BL COMPANIES.

8/17/2020, JSO,AJA, G:\CADD\18\SA\18\8051301\DWG\SU\18051301 DWG.SU-1 24X36.4DWG

Architecture Engineering Environmental Land Surveying
BL Companies
355 Research Parkway
Meriden, CT 06450
(203) 630-1406
(203) 630-2615 Fax

Garden Homes

ROSE EQUITIES
Owner-Builders since 1949

STATE OF CONNECTICUT CHRISTOPHER B. GAUDIO No. 28798 LICENSED PROFESSIONAL ENGINEER

THE RESIDENCES AT MAIN
K & K DEVELOPERS, INC.
5085 MAIN STREET
TRUMBULL, CONNECTICUT

No.	Date	Desc.
1.	6/30/2020	REVISED PER STAFF COMMENTS
2.	8/10/2020	REVISED PER STAFF COMMENTS

REVISIONS

Designed	A.T.K.
Drawn	A.T.K.
Reviewed	J.J.S.
Scale	1"=40'
Project No.	1800513
Date	05/28/2020
CAD File:	SU180051301

Title
SITE UTILITIES PLAN

Sheet No.
SU-1

Xref (s): BD180051301 ; XY180051301 ; XC180051301 ; XY05C133901 ; XY180051302 ; XC180051302 ; XC180051303

EROSION CONTROL LEGEND:

CONTROL MEASURE	ILLUSTRATION
INLET PROTECTION AT CATCH BASINS	IP
STONE CHECK DAM	
SILT FENCE	SF
CONSTRUCTION ENTRANCE	CE
LIMIT OF CLEARING	
LIMIT OF DISTURBANCE LINE AND CONTRACT LIMIT LINE	LOD
EROSION CONTROL BLANKET	ECB
STOCKPILE AREA WITH DOUBLE ROW OF SILT FENCE	
DIVERSION SWALE	
SOIL TYPE BOUNDARY	
SEDIMENT TRAP CONTRIBUTING AREA	
TEMPORARY SILT TRAP	TST
EXISTING TREE TO BE PROTECTED	S

SOIL TYPES

73E	CHARLTON–CHATFIELD COMPLEX (HSG B)
84B	PAXTON AND MONTAUK FINE SANDY LOAMS (HSG C)
273C	URBAN LAND–CHARLTON CHATFIELD COMPLEX (HSG B/D)
284B	PAXTON–URBAN LAND COMPLEX (HSG C/D)
307	URBAN LAND (HSG D)

NOTE: SOILS DATA REFERENCED FROM NRCS WEBSOIL SURVEY.

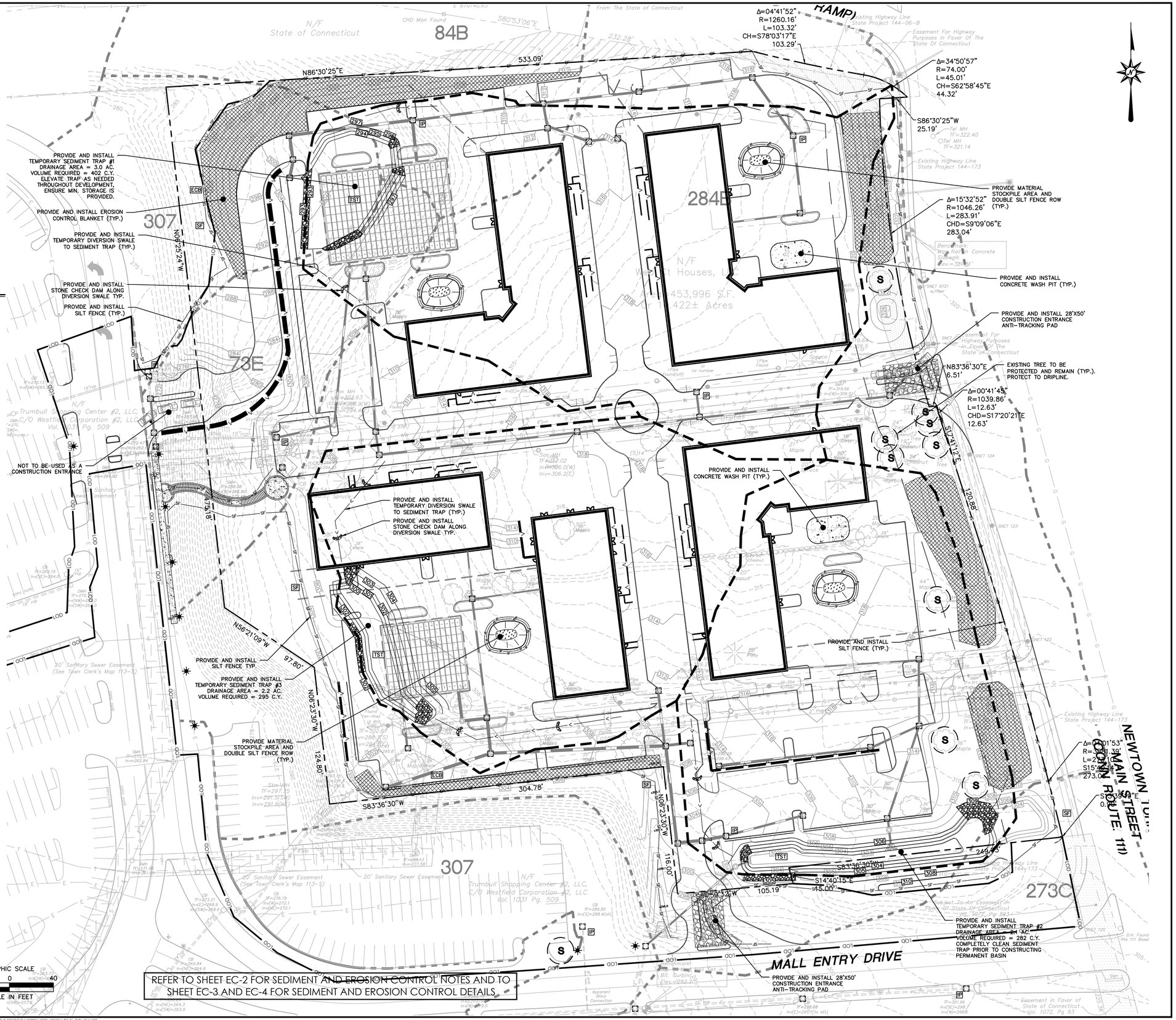

NOT FOR CONSTRUCTION FOR PERMITTING PURPOSES ONLY

REFER TO SHEET EC-2 FOR SEDIMENT AND EROSION CONTROL NOTES AND TO SHEET EC-3 AND EC-4 FOR SEDIMENT AND EROSION CONTROL DETAILS

© 2020 BL COMPANIES, INC. THESE DRAWINGS SHALL NOT BE UTILIZED BY ANY PERSON, FIRM OR CORPORATION WITHOUT THE SPECIFIC WRITTEN PERMISSION OF BL COMPANIES.

Architecture Engineering Environmental Land Surveying
BL Companies
355 Research Parkway
Meriden, CT 06450
(203) 630-1406
(203) 630-2615 Fax

Garden Homes

ROSE EQUITIES
Owner-Builders since 1949

STATE OF CONNECTICUT CHRISTOPHER R. GUIDI No. 27798 LICENSED PROFESSIONAL ENGINEER

THE RESIDENCES AT MAIN
K & K DEVELOPERS, INC.
5085 MAIN STREET
TRUMBULL, CONNECTICUT

REVISIONS		
No.	Date	Desc.
1.	6/30/2020	REVISED PER STAFF COMMENTS
2.	8/10/2020	REVISED PER STAFF COMMENTS

Designed	A.T.K.
Drawn	A.T.K.
Reviewed	J.J.S.
Scale	1"=40'
Project No.	1800513
Date	05/28/2020
CAD File:	EC180051301

Title
SEDIMENT AND EROSION CONTROL PLAN

Sheet No.
EC-1

Xref (s): - BD180051301 ; XY180051301 ; XC180051301 ; XY05C113801 ; XC180051302 ; XC180051304 ; ED180051301 ; XC180051303

B1/2020, JSOJKA, G:\CADD\BRIAN\180051513\DWG\EC-180051301.DWG EC-1 24X36.ADC

SEDIMENT AND EROSION CONTROL NOTES

SEDIMENT AND EROSION CONTROL NOTES – CONNECTICUT

SEDIMENT & EROSION CONTROL NARRATIVE
THE SEDIMENT AND EROSION CONTROL PLAN WAS DEVELOPED TO PROTECT THE EXISTING ROADWAY AND STORM DRAINAGE SYSTEMS, ADJACENT PROPERTIES, AND ANY ADJACENT WETLAND AREA AND ANY ADJACENT WATER COURSE FROM SEDIMENT LADEN SURFACE RUNOFF AND EROSION. A CONSTRUCTION SEQUENCE IS PROVIDED TO PROVIDE SURFACE RUNOFF EROSION CONTROLS PRIOR TO THE BEGINNING OF PROJECT DEMOLITION AND/OR CONSTRUCTION.

CONSTRUCTION SCHEDULE
THE ANTICIPATED STARTING DATE FOR CONSTRUCTION IS SPRING 2021 WITH COMPLETION ANTICIPATED SPRING 2021 APPROPRIATE SEDIMENT AND EROSION CONTROL MEASURES AS DESCRIBED HEREIN SHALL BE INSTALLED BY THE CONTRACTOR PRIOR TO THE COMMENCEMENT OF ALL DEMOLITION OR CONSTRUCTION ACTIVITY. SCHEDULE WORK TO MINIMIZE THE LENGTH OF TIME THAT BARE SOIL WILL BE EXPOSED.

CONTINGENCY EROSION PLAN
THE CONTRACTOR SHALL INSTALL ALL SPECIFIED SEDIMENT AND EROSION CONTROL MEASURES AND WILL BE REQUIRED TO MAINTAIN THEM IN THEIR INTENDED FUNCTIONING CONDITION. THE AGENTS OF THE MUNICIPALITY AND/OR CIVIL ENGINEER SHALL HAVE THE AUTHORITY TO REQUIRE SUPPLEMENTAL MAINTENANCE OR ADDITIONAL MEASURES IF FIELD CONDITIONS ARE ENCOUNTERED BEYOND WHAT WOULD NORMALLY BE ANTICIPATED.

CONSTRUCTION SEQUENCE
THE FOLLOWING CONSTRUCTION SEQUENCE IS RECOMMENDED:

1. CONTACT MUNICIPALITY AND THE PLANNING & ZONING COMMISSION AGENT AT LEAST FORTY–EIGHT (48) HOURS PRIOR TO COMMENCEMENT OF ANY DEMOLITION, CONSTRUCTION OR REGULATED ACTIVITY ON THIS PROJECT.
2. CLEARING LIMITS SHALL BE PHYSICALLY MARKED IN THE FIELD AND APPROVED BY THE MUNICIPALITY AND/OR THEPLANNING & ZONING COMMISSION AGENT PRIOR TO THE START OF WORK ON THE SITE. INSTALL TREE PROTECTION AND PERIMETER SILT FENCE.
3. CONSTRUCT STONE CONSTRUCTION ENTRANCE ANTI–TRACKING PADS AT CONSTRUCTION ENTRANCES/EXITS AND INSTALL FILTER FABRIC AROUND GRATES OF CATCH BASINS OR INSTALL SILT SACKS ON CATCH BASIN INLETS AND ON OFF SITE ROADS. INSTALL SILT FENCE AND OTHER EROSION CONTROL DEVICES INDICATED ON THESE PLANS AT PERIMETER OF PROPOSED SITE DISTURBANCE AND INSTALL ALL EROSION CONTROL MEASURES AND TREE PROTECTION INDICATED ON THESE PLANS. INSTALL SEDIMENT BASINS AND SEDIMENT TRAPS IF REQUIRED AT LOW AREAS OF SITE OR AS ORDERED BY THE ENGINEER OR AS SHOWN ON THESE PLANS.
4. CLEAR AND GRUB SITE. STOCKPILE CHIPS. STOCKPILE TOPSOIL. INSTALL SEDIMENT AND EROSION CONTROLS AT STOCKPILES.
5. SITE DEMOLITION AND REMOVAL. PAVEMENT REMOVAL.
6. INSTALL SILT FENCE, CONSTRUCT DIVERSION SWALES AND SEDIMENT TRAPS. COMMENCE INSTALLATION OF STORM DRAINAGE SYSTEM.
7. COMMENCE EARTHWORK. CONSTRUCT FILL SLOPE, ROADWAY AND RETAINING WALLS. INSTALL ADDITIONAL SEDIMENT AND EROSION CONTROLS AS WORK PROGRESSES AND CONTINUE STORM DRAINAGE SYSTEM CONSTRUCTION, TOPSOIL AND SEED SLOPES WHICH HAVE ACHIEVED FINAL SITE GRADING.
8. CONSTRUCTION STAKING OF ALL BUILDING CORNERS, UTILITIES, ACCESS DRIVES, AND PARKING AREAS.
9. ROUGH GRADING AND FILLING OF SUBGRADES AND SLOPES.
10. IMMEDIATELY UPON DISCOVERING UNFORESEEN CIRCUMSTANCES POSING THE POTENTIAL FOR ACCELERATED EROSION AND/OR SEDIMENT POLLUTION, THE OPERATOR SHALL IMPLEMENT APPROPRIATE BEST MANAGEMENT PRACTICES TO ELIMINATE THE POTENTIAL FOR ACCELERATED EROSION AND/OR SEDIMENT POLLUTION.
11. BEFORE DISPOSING OF SOIL OR RECEIVING BORROW FOR THE SITE, THE CONTRACTOR MUST PROVIDE EVIDENCE THAT EACH SPOIL OR BORROW AREA HAS A SEDIMENT AND EROSION CONTROL PLAN APPROVED BY THE MUNICIPALITY AND/OR THE INLAND WETLANDS COMMISSION AND WHICH IS BEING IMPLEMENTED AND MAINTAINED. THE CONTRACTOR SHALL ALSO NOTIFY THE MUNICIPALITY AND/OR THE PLANNING & ZONING COMMISSION IN WRITING OF ALL RECEIVING SPOIL AND BORROW AREAS WHEN THEY HAVE BEEN IDENTIFIED.
12. CONTINUE INSTALLATION OF STORM DRAINAGE AS SUBGRADE ELEVATIONS ARE ACHIEVED.
13. BUILDINGS FOUNDATION SUBGRADE AND PAD SUBGRADE PREPARATION.
14. BUILDINGS FOUNDATION CONSTRUCTION. BEGIN BUILDING SUPERSTRUCTURE
15. THROUGHOUT CONSTRUCTION SEQUENCE, REMOVE SEDIMENT FROM BEHIND SILT FENCES, HAY BALES AND OTHER EROSION CONTROL DEVICES, AND FROM SEDIMENT BASINS AND SEDIMENT TRAPS AS REQUIRED. REMOVAL SHALL BE ON A PERIODIC BASIS (EVERY SIGNIFICANT RAINFALL OF 0.25 INCH OR GREATER). INSPECTION OF SEDIMENT AND EROSION CONTROL MEASURES SHALL BE ON A WEEKLY BASIS AND AFTER EACH RAINFALL OF 0.25 INCHES OR GREATER. SEDIMENT COLLECTED SHALL BE DEPOSITED AND SPREAD EVENLY UPLAND ON SLOPES DURING CONSTRUCTION.
16. INSTALL SANITARY LATERALS AND UTILITIES. COMPLETE STORM DRAINAGE SYSTEM.
17. INSTALL SITE LIGHTING AND CONCRETE PADS AND TRASH ENCLOSURES.
18. COMPLETE GRADING TO SUBGRADES AND CONSTRUCT PARKING AREA SUBGRADE.
19. CONSTRUCT CURBS, PAVEMENT STRUCTURE AND SIDEWALKS.
20. CONDUCT FINE GRADING.
21. PAVING OF PARKING AREAS AND ROADWAYS
22. FINAL FINE GRADING OF SLOPE AND NON–PAVED AREAS.
23. PLACE 4" TOPSOIL ON SLOPES AFTER FINAL GRADING IS COMPLETED. FERTILIZE SEED AND MULCH. SEED MIXTURE TO BE INSTALLED APRIL 15 – JUNE 1 OR AUGUST 15 – OCTOBER 1 USE EROSION CONTROL BLANKETS AS REQUIRED OR ORDERED FOR SLOPES 3:1 AND GREATER THAN 3:1 AND AS SHOWN ON LANDSCAPE PLANS OR EROSION CONTROL PLANS. FOR TEMPORARY STABILIZATION BEYOND SEEDING DATES USE ANNUAL RYE AT 4.0 LBS/1,000 S.F. FERTILIZE WITH 10–10–10 AT 1.0 LBS. OF NITROGEN PER 1,000 S.F. AND LIME AT 100 LBS/1,000 S.F. (MAX.).
24. LANDSCAPE ISLANDS, INTERIOR NON–PAVED AREAS, AND PERIMETER AREAS.
25. INSTALL SIGNING AND PAVEMENT MARKINGS
26. CLEAN STORM DRAINAGE PIPE STRUCTURES, DETENTION SYSTEMS AND WATER QUALITY DEVICES OF DEBRIS AND SEDIMENT.
27. UPON DIRECTION OF THE MUNICIPALITY AND/OR THE PLANNING & ZONING COMMISSION AGENT, SEDIMENT AND EROSION CONTROL MEASURES SHALL BE REMOVED FOLLOWING STABILIZATION OF THE SITE.

OPERATION REQUIREMENTS

CLEARING AND GRUBBING OPERATIONS

1. ALL SEDIMENT AND EROSION CONTROL MEASURES, INCLUDING THE CONSTRUCTION OF ANY TEMPORARY SEDIMENTATION BASINS AND STONE CONSTRUCTION ENTRANCE ANTI–TRACKING PADS, WILL BE INSTALLED PRIOR TO THE START OF CLEARING AND GRUBBING AND DEMOLITION OPERATIONS.
2. FOLLOWING INSTALLATION OF ALL SEDIMENT AND EROSION CONTROL MEASURES, THE CONTRACTOR SHALL NOT PROCEED WITH GRADING, FILLING OR OTHER CONSTRUCTION OPERATIONS UNTIL THE ENGINEER HAS INSPECTED AND APPROVED ALL INSTALLATIONS.
3. THE CONTRACTOR SHALL TAKE EXTREME CARE DURING CLEARING AND GRUBBING OPERATIONS SO AS NOT TO DISTURB UNPROTECTED WETLAND AREAS OR SEDIMENT AND EROSION CONTROL DEVICES.
4. FOLLOWING THE COMPLETION OF CLEARING AND GRUBBING OPERATIONS, ALL AREAS SHALL BE STABILIZED WITH TOPSOIL AND SEEDING OR CRUSHED STONE AS SOON AS PRACTICAL.

ROUGH GRADING OPERATIONS

1. DURING THE REMOVAL AND/OR PLACEMENT OF EARTH AS INDICATED ON THE GRADING PLAN, TOPSOIL SHALL BE STRIPPED AND APPROPRIATELY STOCKPILED FOR REUSE.
2. ALL STOCKPILED TOPSOIL SHALL BE SEEDED, MULCHED WITH HAY, AND ENCLOSED BY A SILTATION FENCE.

FILLING OPERATIONS

1. PRIOR TO FILLING, ALL SEDIMENT AND EROSION CONTROL DEVICES SHALL BE PROPERLY IMPLEMENTED, MAINTAINED AND FULLY INSTALLED, AS DIRECTED BY THE ENGINEER AND AS SHOWN ON THIS PLAN.
2. ALL FILL MATERIAL ADJACENT TO ANY WETLAND AREAS, IF APPLICABLE TO THIS PROJECT, SHALL BE GOOD QUALITY, WITH LESS THAN 5% FINES PASSING THROUGH A #200 SIEVE (BANK RUN), SHALL BE PLACED IN LIFT THICKNESSES NOT GREATER THAN THAT SPECIFIED IN PROJECT SPECIFICATIONS AND/OR THE PROJECT GEOTECHNICAL REPORT. LIFTS SHALL BE COMPACTED TO 95% MAX. DRY DENSITY MODIFIED PROCTOR OR AS SPECIFIED IN THE CONTRACT SPECIFICATIONS OR IN THE GEOTECHNICAL REPORT.
3. AS GENERAL GRADING OPERATIONS PROGRESS, ANY TEMPORARY DIVERSION DITCHES SHALL BE RAISED OR LOWERED, AS NECESSARY, TO DIVERT SURFACE RUNOFF TO THE SEDIMENT BASINS OR SEDIMENT TRAPS.

PLACEMENT OF DRAINAGE STRUCTURES, UTILITIES, AND BUILDING CONSTRUCTION OPERATIONS.

1. SILT FENCES SHALL BE INSTALLED AT THE DOWNHILL SIDES OF BUILDING EXCAVATIONS, MUD PUMP DISCHARGES, AND UTILITY TRENCH MATERIAL STOCKPILES. HAY BALES/STRAW BALES MAY BE USED IF SHOWN ON THE SEDIMENT AND EROSION CONTROL PLANS OR IF DIRECTED BY THE CIVIL ENGINEER.

FINAL GRADING AND PAVING OPERATIONS

1. ALL INLET AND OUTLET PROTECTION SHALL BE PLACED AND MAINTAINED AS SHOWN ON SEDIMENT AND EROSION CONTROL PLANS AND DETAILS, AND AS DESCRIBED IN SPECIFICATIONS AND AS DESCRIBED HEREIN.
2. NO CUT OR FILL SLOPES SHALL EXCEED 2:1 EXCEPT WHERE STABILIZED BY ROCK FACED EMBANKMENTS OR EROSION CONTROL BLANKETS, OR JUTE MESH AND VEGETATION. ALL SLOPES SHALL BE SEEDED, AND ANY ROAD OR DRIVEWAY SHOULDER AND BANKS SHALL BE STABILIZED IMMEDIATELY UPON COMPLETION OF FINAL GRADING UNTIL TURF IS ESTABLISHED.
3. PAVEMENT SUB–BASE AND BASE COURSES SHALL BE INSTALLED OVER AREAS TO BE PAVED AS SOON AS FINAL SUB–GRADES ARE ESTABLISHED AND UNDERGROUND UTILITIES AND STORM DRAINAGE SYSTEMS HAVE BEEN INSTALLED.
4. AFTER CONSTRUCTION OF PAVEMENT, TOPSOIL, FINAL SEED, MULCH AND LANDSCAPING, REMOVE ALL TEMPORARY SEDIMENT AND EROSION CONTROL DEVICES ONLY AFTER ALL AREAS HAVE BEEN PAVED AND/OR GRASS HAS BEEN WELL ESTABLISHED AND THE SITE IS STABLE AND HAS BEEN INSPECTED AND APPROVED BY THE MUNICIPALITY THE PLANNING & ZONING COMMISSION.

INSTALLATION OF SEDIMENTATION AND EROSION CONTROL MEASURES

I. SILTATION FENCE
A. DIG A SIX INCH TRENCH ON THE UPHILL SIDE OF THE DESIGNATED FENCE LINE LOCATION.

B. POSITION THE POST AT THE BACK OF THE TRENCH (DOWNHILL SIDE), AND HAMMER THE POST AT LEAST 1.5 FEET INTO THE GROUND.

C. LAY THE BOTTOM SIX INCHES OF THE FABRIC INTO THE TRENCH TO PREVENT UNDERMINING BY STORM WATER RUN–OFF.

D. BACKFILL THE TRENCH AND COMPACT.

II. HAY BALES/STRAW BALES
A. BALES SHALL BE PLACED IN A SINGLE ROW, LENGTHWISE, ORIENTED PARALLEL TO THE CONTOUR, WITH ENDS OF ADJACENT BALES TIGHTLY ABUTTING ONE ANOTHER.

B. BALES SHALL BE ENTRENCHED AND BACKFILLED. A TRENCH SHALL BE EXCAVATED THE WIDTH OF A BALE AND THE LENGTH OF THE PROPOSED BARRIER TO A MINIMUM DEPTH OF FOUR INCHES. AFTER THE BALES ARE STAKED, THE EXCAVATED SOIL SHALL BE BACKFILLED AGAINST THE BARRIER.

C. EACH BALE SHALL BE SECURELY ANCHORED BY AT LEAST TWO (2) STAKES.

D. THE GAPS BETWEEN BALES SHALL BE WEDGED WITH STRAW TO PREVENT WATER LEAKAGE.

E. THE BARRIER SHALL BE EXTENDED TO SUCH A LENGTH THAT THE BOTTOMS OF THE END BALES ARE HIGHER IN ELEVATION THAN THE TOP OF THE LOWEST MIDDLE BALE, TO ENSURE THAT RUN–OFF WILL FLOW EITHER THROUGH OR OVER THE BARRIER, BUT NOT AROUND IT.

OPERATION AND MAINTENANCE OF SEDIMENT AND EROSION CONTROL MEASURES
I. SILTATION FENCE
A. ALL SILTATION FENCES SHALL BE INSPECTED AS A MINIMUM WEEKLY OR AFTER EACH RAINFALL. ALL DETERIORATED FABRIC AND DAMAGED POSTS SHALL BE REPLACED AND PROPERLY REPOSITIONED IN ACCORDANCE WITH THIS PLAN.

B. SEDIMENT DEPOSITS SHALL BE REMOVED FROM BEHIND THE FENCE WHEN THEY REACH A MAXIMUM HEIGHT OF ONE FOOT.

II. HAY BALES/STRAW BALES
A. ALL HAY BALE/STRAW BALE RINGS SHALL BE INSPECTED FOLLOWING EACH RAINFALL. REPAIR OR REPLACEMENT SHALL BE PROMPTLY MADE AS NEEDED.

B. DEPOSITS SHALL BE REMOVED AND CLEANED–OUT IF ONE HALF OF THE ORIGINAL HEIGHT OF THE BALES BECOMES FILLED WITH SEDIMENT.

III. SEDIMENT TRAPS
A. CONTRACTOR TO KEEP WEEKLY CHECKLIST LOGS FOR INSPECTIONS OF ALL SEDIMENT AND EROSION CONTROL DEVICES AND HAVE THEM READILY AVAILABLE ON–SITE AT ALL TIMES FOR INSPECTION BY CT DEEP, LOCAL AUTHORITIES OR ENGINEER.

B. ALL SEDIMENT BASINS AND/OR SEDIMENT TRAPS SHALL BE INSPECTED FOLLOWING EACH RAINFALL. REPAIR OF SLOPES SHALL BE PROMPTLY MADE AS NEEDED.

C. SEDIMENT DEPOSITS SHALL BE REMOVED FROM SEDIMENT BASINS AND/OR SEDIMENT TRAPS WHEN THEY REACH A MAXIMUM HEIGHT OF ONE FOOT UNLESS OTHERWISE INDICATED ON THE EROSION CONTROL PLANS AND DETAILS TO BE AT A SPECIFIC ELEVATION PER CLEAN OUT MARKERS.

D. SEDIMENT SHALL BE DISPOSED OF ON–SITE OR AS DIRECTED BY THE ENGINEER AND LOCAL GOVERNING OFFICIALS. SEE SEDIMENT AND EROSION CONTROL NOTES HEREIN REGARDING DISPOSAL REQUIREMENTS FOR OFF SITE SPOIL DISPOSAL.

SEDIMENT AND EROSION CONTROL PLAN
1. HAY BALE/STRAW BALE FILTERS WILL BE INSTALLED AT ALL CULVERT OUTLETS IF CULVERT OUTLETS ARE APPLICABLE TO THIS PROJECT AND SILTATION FENCE INSTALLED ALONG THE TOE OF ALL CRITICAL CUT AND FILL SLOPES.
2. CULVERT DISCHARGE AREAS WILL BE PROTECTED WITH RIP RAP CHANNELS. ENERGY DISSIPATORS WILL BE INSTALLED AS SHOWN ON THESE PLANS AND AS NECESSARY.
3. CATCH BASINS WILL BE PROTECTED WITH HAY BALE/STRAW BALE FILTERS, SILT SACKS, SILTATION FENCE, OR OTHER INLET PROTECTION DEVICES PER DETAILS, THROUGHOUT THE CONSTRUCTION PERIOD AND UNTIL ALL DISTURBED AREAS ARE THOROUGHLY STABILIZED.
4. ALL SEDIMENT AND EROSION CONTROL MEASURES WILL BE INSTALLED IN ACCORDANCE WITH THE STANDARDS AND SPECIFICATIONS OF THE 2002 CONNECTICUT GUIDELINES FOR SOIL EROSION AND SEDIMENT CONTROL OR LATEST EDITION.
5. SEDIMENT AND EROSION CONTROL MEASURES WILL BE INSTALLED PRIOR TO DEMOLITION AND/OR CONSTRUCTION WHENEVER POSSIBLE.
6. ALL CONTROL MEASURES WILL BE MAINTAINED IN EFFECTIVE CONDITION THROUGHOUT THE DEMOLITION AND CONSTRUCTION PERIOD UNTIL THE SITE IS DETERMINED TO BE STABILIZED BY THE AUTHORITY HAVING JURISDICTION.
7. ADDITIONAL CONTROL MEASURES WILL BE INSTALLED DURING THE CONSTRUCTION PERIOD, IF NECESSARY OR REQUIRED OR AS DIRECTED BY THE CIVIL ENGINEER OR BY THE AUTHORITY HAVING JURISDICTION.
8. SEDIMENT REMOVED FROM EROSION CONTROL STRUCTURES WILL BE DISPOSED IN A MANNER WHICH IS CONSISTENT WITH THE INTENT AND REQUIREMENTS OF THE SEDIMENT AND EROSION CONTROL PLANS, NOTES, AND DETAILS.
9. SCOTT LOVENTHAL OF GARDEN HOMES DEVELOPMENT, #973–467–5000 X1212, IS ASSIGNED THE RESPONSIBILITY FOR IMPLEMENTING THIS SEDIMENT AND EROSION CONTROL PLAN. THIS RESPONSIBILITY INCLUDES THE INSTALLATION AND MAINTENANCE OF CONTROL MEASURES, INFORMING ALL PARTIES ENGAGED ON THE CONSTRUCTION SITE OF THE REQUIREMENTS AND OBJECTIVES OF THE PLAN, NOTIFICATION OF THE MUNICIPALITY AND THE PLANNING & ZONING COMMISSION OFFICE OR AUTHORITY HAVING JURISDICTION OF ANY TRANSFER OF THIS RESPONSIBILITY AND FOR CONVEYING A COPY OF THE SEDIMENT AND EROSION CONTROL PLAN IF THE TITLE TO THE LAND IS TRANSFERRED.

SEDIMENT AND EROSION CONTROL NOTES
1. THE SEDIMENT AND EROSION CONTROL PLAN IS ONLY INTENDED TO DESCRIBE THE SEDIMENT AND EROSION CONTROL TREATMENT FOR THIS SITE. SEE SEDIMENT AND EROSION CONTROL DETAILS AND CONSTRUCTION SEQUENCE. REFER TO SITE PLAN FOR GENERAL INFORMATION AND OTHER CONTRACT PLANS FOR APPROPRIATE INFORMATION.
2. THE CONTRACTOR IS RESPONSIBLE FOR IMPLEMENTING THIS SEDIMENT AND EROSION CONTROL PLAN. THIS RESPONSIBILITY INCLUDES THE PROPER INSTALLATION AND MAINTENANCE OF SEDIMENT AND EROSION CONTROL MEASURES, INFORMING ALL PARTIES ENGAGED WITH CONSTRUCTION ON THE SITE OF THE REQUIREMENTS AND OBJECTIVES OF THIS PLAN, INFORMING THE AUTHORITY HAVING JURISDICTION OR PLANNING & ZONING AGENCY OF ANY TRANSFER OF THIS RESPONSIBILITY, AND FOR CONVEYING A COPY OF THE SEDIMENT & EROSION CONTROL PLAN IF THE TITLE TO THE LAND IS TRANSFERRED.
3. AN EROSION CONTROL BOND MAY BE REQUIRED TO BE POSTED WITH THE TOWN OF TRUMBULL TO ENSURE IMPLEMENTATION OF THE SEDIMENT AND EROSION CONTROL MEASURES. THE CONTRACTOR SHALL BE RESPONSIBLE FOR THE POSTING OF THIS BOND AND FOR INQUIRIES TO THE TOWN OF TRUMBULL FOR INFORMATION ON THE METHOD, TYPE AND AMOUNT OF THE BOND POSTING UNLESS OTHERWISE DIRECTED BY THE OWNER.
4. VISUAL SITE INSPECTIONS SHALL BE CONDUCTED WEEKLY, AND AFTER EACH MEASURABLE PRECIPITATION EVENT OF 0.25 INCHES OR GREATER BY QUALIFIED PERSONNEL, TRAINED AND EXPERIENCED IN SEDIMENT AND EROSION CONTROL, TO ASCERTAIN THAT THE SEDIMENT AND EROSION CONTROL (E&S) BMPS ARE OPERATIONAL AND EFFECTIVE IN PREVENTING POLLUTION. A WRITTEN REPORT OF EACH INSPECTION SHALL BE KEPT, AND INCLUDE:
A) A SUMMARY OF THE SITE CONDITIONS, E&S BMPS, AND COMPLIANCE; AND
B) THE DATE, TIME, AND THE NAME OF THE PERSON CONDUCTING THE INSPECTION
C) TURBIDITY TESTING AS REQUIRED BY THE CT DEEP CONSTRUCTION GENERAL PERMIT (NPDES)
5. THE CONTRACTOR SHALL CONSTRUCT ALL SEDIMENT AND EROSION CONTROLS IN ACCORDANCE WITH THE 2002 CONNECTICUT GUIDELINES FOR SOIL EROSION AND SEDIMENT CONTROL OR LATEST EDITION IN ACCORDANCE WITH THE CONTRACT DOCUMENTS, AND AS DIRECTED BY THE MUNICIPALITY AND THE PLANNING & ZONING COMMISSION. THE CONTRACTOR SHALL KEEP A COPY OF THE GUIDELINES ON–SITE FOR REFERENCE DURING CONSTRUCTION.
6. ADDITIONAL AND/OR ALTERNATIVE SEDIMENT AND EROSION CONTROL MEASURES MAY BE INSTALLED DURING THE CONSTRUCTION PERIOD IF FOUND NECESSARY BY THE CONTRACTOR, OWNER, SITE ENGINEER, MUNICIPALITY AND/OR THE PLANNING & ZONING COMMISSION, OR GOVERNING AGENCIES. THE CONTRACTOR SHALL CONTACT THE OWNER AND APPROPRIATE GOVERNING AGENCIES FOR APPROVAL IF ALTERNATIVE CONTROLS OTHER THAN THOSE SHOWN ON THE PLANS ARE PROPOSED.
7. THE CONTRACTOR SHALL INSPECT ALL SEDIMENT AND EROSION CONTROLS BEFORE AND AFTER EACH STORM (0.25 INCHES OR GREATER RAINFALL), OR AT LEAST WEEKLY, TO VERIFY THAT THE CONTROLS ARE OPERATING PROPERLY AND MAKE REPAIRS WHERE NECESSARY.
8. THE CONTRACTOR SHALL KEEP A SUPPLY OF SEDIMENT AND EROSION CONTROL MATERIAL (HAY BALES, SILT FENCE, JUTE MESH, RIP RAP, ETC.) ON–SITE FOR MAINTENANCE AND EMERGENCY REPAIRS.
9. PROTECT EXISTING TREES THAT ARE TO BE SAVED BY FENCING AT THE DRIP LINE OR AS SHOWN WITH SNOW FENCE, ORANGE SAFETY FENCE, OR EQUIVALENT FENCING. ANY LIMB TRIMMING SHOULD BE DONE BEFORE CONSTRUCTION BEGINS IN THAT AREA; FENCING SHALL BE MAINTAINED AND REPAIRED DURING CONSTRUCTION.
10. INSTALL PERIMETER SEDIMENT AND EROSION CONTROLS PRIOR TO CLEARING OR CONSTRUCTION. ALL CONSTRUCTION SHALL BE CONTAINED WITHIN THE LIMIT OF DISTURBANCE, WHICH SHALL BE MARKED WITH SILT FENCE, SAFETY FENCE, HAY BALES, RIBBONS, OR OTHER MEANS PRIOR TO CLEARING. CONSTRUCTION ACTIVITY SHALL REMAIN ON THE UPHILL SIDE OF THE SILT FENCE UNLESS WORK IS SPECIFICALLY CALLED FOR ON THE DOWNHILL SIDE OF THE FENCE.
11. STONE CONSTRUCTION ENTRANCE ANTI–TRACKING PADS SHALL BE INSTALLED AT START OF CONSTRUCTION AND MAINTAINED THROUGHOUT THE DURATION OF CONSTRUCTION. THE LOCATION OF THE TRACKING PADS MAY CHANGE AS VARIOUS PHASES OF CONSTRUCTION ARE COMPLETED.
12. TOPSOIL SHALL BE STRIPPED AND STOCKPILED FOR USE IN FINAL LANDSCAPING. ALL EARTH STOCKPILES SHALL HAVE HAY BALES OR SILT FENCE AROUND THE LIMIT OF PILE. PILES SHALL BE TEMPORARILY SEEDED IF PILE IS TO REMAIN IN PLACE FOR MORE THAN ONE (1) MONTH.
13. SEDIMENT TRAPS SHALL PROVIDE 134 CUBIC YARDS OF SEDIMENT STORAGE PER ACRE CONTRIBUTING TO THE BASIN. PROVIDE BASIN VOLUMES FOR ALL DISTURBANCE ON SITE.
14. COMPLY WITH REQUIREMENTS OF CGS SECTION 22A 430B, FOR STORMWATER DISCHARGE FROM CONSTRUCTION ACTIVITIES AND WITH CT DEEP RECORD KEEPING AND INSPECTION REQUIREMENTS.
15. STONE CONSTRUCTION ENTRANCE ANTI–TRACKING PADS SHALL BE INSTALLED PRIOR TO ANY ON SITE EXCAVATION AND SHALL BE MAINTAINED DURING ALL DEMOLITION, EXCAVATION AND CONSTRUCTION ACTIVITIES.
16. MINIMIZE LAND DISTURBANCES. SEED AND MULCH DISTURBED AREAS WITH TEMPORARY MIX AS SOON AS PRACTICABLE (ONE WEEK MAXIMUM UNSTABILIZED PERIOD) USING PERENNIAL RYEGRASS AT 40 LBS PER ACRE. MULCH ALL CUT AND FILL SLOPES AND SWALES WITH LOOSE HAY AT A RATE OF 2 TONS PER ACRE. IF NECESSARY, REPLACE LOOSE HAY ON SLOPES WITH EROSION CONTROL BLANKETS OR JUTE CLOTH. MODERATELY GRADED AREAS, ISLANDS, AND TEMPORARY CONSTRUCTION STAGING AREAS MAY BE HYDROSEEDED WITH TACKIFIER.
17. MAINTAIN EXISTING PAVED AREAS FOR CONSTRUCTION STAGING FOR AS LONG AS POSSIBLE.
18. SILT FENCE AND OTHER SEDIMENT AND EROSION CONTROL MEASURES SHALL BE INSTALLED IN ACCORDANCE WITH CONTRACT DRAWINGS AND MANUFACTURER'S RECOMMENDATIONS PRIOR TO WORK IN ANY UPLAND AREAS.
19. EXCAVATED MATERIAL FROM TEMPORARY SILT TRAPS MUST BE STOCKPILED ON UPHILL SIDE OF SILT FENCE.
20. INSTALL SILT FENCE ACCORDING TO MANUFACTURER'S INSTRUCTION, PARTICULARLY, BURY LOWER EDGE OF FABRIC INTO GROUND. SILT FENCE SHALL BE TENCATE ENVIROFENCE, PROPEX GEOTEX OR EQUIVALENT APPROVED BY THE CIVIL ENGINEER. FILTER FABRIC USED SHALL BE TENCATE 140N OR 170N, OR APPROVED EQUIVALENT. SEE SPECIFICATIONS FOR FURTHER INFORMATION.
21. WHERE INDICATED ON SEDIMENT AND EROSION CONTROL PLANS USE NEW HAY/STRAW BALES AND REPLACE THEM WHENEVER THEIR CONDITION DETERIORATES BEYOND REASONABLE USABILITY. STAKE BALES SECURELY INTO GROUND AND BUTT TIGHTLY TOGETHER TO PREVENT UNDERCUTTING AND BYPASSING.
22. INSTALL TEMPORARY DIVERSION DITCHES, PLUNGE POOLS, SEDIMENT BASINS, SEDIMENT TRAPS, CONCRETE WASH PITS AND DEWATERING PITS AS SHOWN AND AS NECESSARY DURING VARIOUS PHASES OF CONSTRUCTION TO CONTROL RUNOFF UNTIL UPHILL AREAS ARE DETERMINED TO BE STABILIZED BY THE AUTHORITY HAVING JURISDICTION. LOCATION OF TEMPORARY SEDIMENT BASINS WILL REQUIRE REVIEW AND APPROVAL BY THE CIVIL ENGINEER AND AUTHORITY HAVING JURISDICTION.
23. DIRECT ALL DEWATERING PUMP DISCHARGE TO A SEDIMENT CONTROL DEVICE SUCH AS TEMPORARY PITS, SEDIMENT TRAP, SEDIMENT BASINS OR GRASS FILTERS WITHIN THE APPROVED LIMIT OF DISTURBANCE. DISCHARGE TO STORM DRAINAGE SYSTEM OR SURFACE WATERS FROM SEDIMENT CONTROLS SHALL BE CLEAR.
24. BLOCK THE OPEN UPSTREAM ENDS OF DETENTION BASIN/SEDIMENT TRAP OUTLET CONTROL ORIFICE UNTIL SITE IS STABILIZED. BLOCK END OF STORM SEWERS IN EXPOSED TRENCHES WITH BOARDS AND SANDBAGS AT THE END OF EACH WORKING DAY WHEN RAIN IS EXPECTED.
25. SWEEP AFFECTED PORTIONS OF OFF SITE ROADS ONE OR MORE TIMES A DAY (OR LESS FREQUENTLY IF TRACKING IS NOT A PROBLEM) DURING CONSTRUCTION. OTHER DUST CONTROL MEASURES TO BE USED AS NECESSARY INCLUDE WATERING DOWN DISTURBED AREAS, USING CALCIUM CHLORIDE, AND COVERING LOADS ON DUMP TRUCKS.
26. PERIODICALLY CHECK ACCUMULATED SEDIMENT LEVELS IN THE SEDIMENT BASINS AND SEDIMENT TRAPS DURING CONSTRUCTION AND CLEAN ACCUMULATED SILT WHEN NECESSARY OR WHEN ONE FOOT OF SEDIMENT HAS ACCUMULATED OR PER SPECIFIC CLEANOUT MARKER ELEVATION. CLEAN ACCUMULATED SEDIMENT FROM CATCH BASIN SUMPS AS NECESSARY AND AS DIRECTED BY THE CIVIL ENGINEER OR OWNER'S CONSTRUCTION REPRESENTATIVE. REMOVE ACCUMULATED SEDIMENT FROM BEHIND HAY/STRAW BALES AND SILT FENCE WHEN LEVEL REACHES HALF THE HEIGHT OF THE BALE OR ONE FOOT AT SILT FENCE. DISPOSE OF SEDIMENT LEGALLY EITHER ON OR OFF SITE.
27. IMMEDIATELY UPON DISCOVERING UNFORESEEN CIRCUMSTANCES POSING THE POTENTIAL FOR ACCELERATED EROSION AND/OR SEDIMENT POLLUTION, THE OPERATOR SHALL IMPLEMENT APPROPRIATE BEST MANAGEMENT PRACTICES TO ELIMINATE THE POTENTIAL FOR ACCELERATED EROSION AND/OR SEDIMENT POLLUTION.
28. ALL PUMPING OF SEDIMENT LADEN WATER SHALL BE THROUGH A SEDIMENT CONTROL BMP, SUCH AS A PUMPED WATER FILTER BAG OR EQUIVALENT SEDIMENT REMOVAL FACILITY, OVER UNDISTURBED VEGETATED AREAS.
29. ALL EXCAVATED MATERIAL SHALL BE PLACED ON THE HIGH SIDE OF UTILITY AND STORM PIPE TRENCHES SO AS TO ALLOW THE TRENCH TO INTERCEPT ALL SILT LADEN RUNOFF.
30. CONTRACTOR SHALL ONLY EXCAVATE AS MUCH UTILITY AND STORM PIPE TRENCH WORK AS CAN BE COMPLETED, BACKFILLED AND STABILIZED IN ONE DAY SO AS TO LIMIT THE AMOUNT OF OPEN, DISTURBED TRENCHING.
31. ANY STOCKPILES OF STRIPPED MATERIALS ARE TO BE PERIODICALLY SPRAYED WITH WATER OR A CRUSTING AGENT TO STABILIZE POTENTIALLY WIND–BLOWN MATERIAL. HAUL ROADS BOTH INTO AND AROUND THE SITE ARE TO BE SPRAYED AS NEEDED TO SUPPRESS DUST. TRUCKS HAULING IMPORT FILL MATERIAL ARE TO BE TARPED TO AID IN THE CONTROL OF AIRBORNE DUST. DURING HIGH WIND EVENTS (20 TO 30 MPH SUSTAINED) CONSTRUCTION ACTIVITY SHALL BE LIMITED OR CEASED IF DUST CANNOT BE CONTROLLED BY WETTING.
32. AN AREA SHALL BE CONSIDERED TO HAVE ACHIEVED FINAL STABILIZATION WHEN IT HAS A MINIMUM OF 70% UNIFORM PERENNIAL VEGETATIVE COVER OR OTHER PERMANENT NON–VEGETATIVE COVER WITH A DENSITY SUFFICIENT TO RESIST ACCELERATED SURFACE EROSION AND SUBSURFACE CHARACTERISTICS SUFFICIENT TO RESIST SLIDING OR OTHER MOVEMENTS UNLESS OTHERWISE DETERMINED BY THE AUTHORITY HAVING JURISDICTION.
33. MAINTAIN ALL PERMANENT AND TEMPORARY EROSION AND SEDIMENT CONTROL DEVICES IN EFFECTIVE CONDITION THROUGHOUT THE CONSTRUCTION PERIOD. UPON COMPLETION OF WORK SWEEP PARKING LOT AND REMOVE ALL TEMPORARY EROSION AND SEDIMENT CONTROLS WHEN AUTHORIZED BY AUTHORITY HAVING JURISDICTION. FILE NOT (NOTICE OF TERMINATION) WITH AUTHORITY HAVING JURISDICTION RESPONSIBLE FOR REGULATING STORM WATER DISCHARGES FROM CONSTRUCTION ACTIVITIES PER NPDES.
34. NO BRUSH, DEBRIS, OR STUMPS SHALL BE BURIED ON–SITE. THESE MATERIALS SHALL BE REMOVED TO AN APPROVED LANDFILL.

NOT FOR CONSTRUCTION
FOR PERMITTING PURPOSES ONLY

Architecture
Engineering
Environmental
Land Surveying

BL Companies

355 Research Parkway
Meriden, CT 06450
(203) 630-1406
(203) 630-2615 Fax

Garden Homes

ROSE EQUITIES
Owner-Builders since 1949

STATE OF CONNECTICUT · CHRISTOPHER D. GAGNON · No. 25798 · LICENSED · PROFESSIONAL ENGINEER

THE RESIDENCES AT MAIN
K & K DEVELOPERS, INC.
5085 MAIN STREET
TRUMBULL, CONNECTICUT

REVISIONS

No.	Date	Desc.
1.	6/30/2020	REVISED PER STAFF COMMENTS
2.	8/10/2020	REVISED PER STAFF COMMENTS

Designed	A.T.K.
Drawn	A.T.K.
Reviewed	J.J.S.
Scale	NONE
Project No.	1800513
Date	05/28/2020

CAD File:
EC180051301

Title
SEDIMENT AND EROSION CONTROL NOTES

Sheet No.
EC-2

Xref (s): ; BD180051301 ; XY180051301 ; XC180051301 ; XY05C133801 ; XY180051302 ; XC180051302 ; XC180051304 ; ED180051301 ; XC180051303

8/17/2020, JSOJKA, G:\JOBS18\04\1800513\DWG\EC180051301.DWG,EC-2 24X36.

© 2020 BL COMPANIES, INC. THESE DRAWINGS SHALL NOT BE UTILIZED BY ANY PERSON, FIRM OR CORPORATION WITHOUT THE SPECIFIC WRITTEN PERMISSION OF BL COMPANIES.

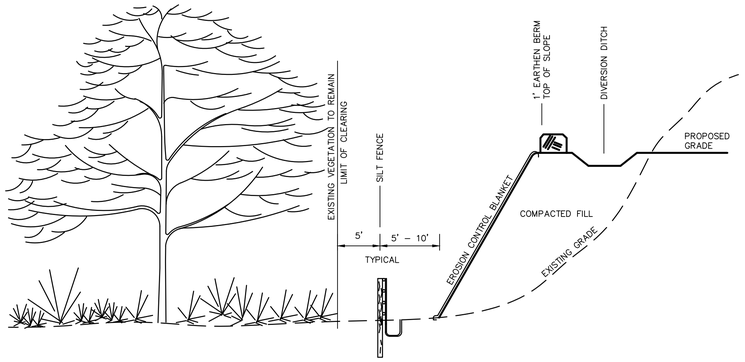

TYPICAL EROSION CONTROL ON SLOPES

N.T.S. BLEC–011

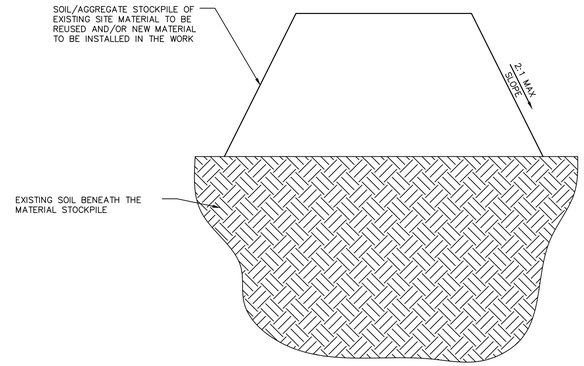

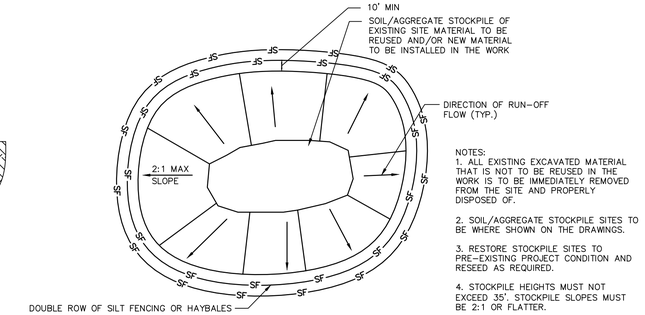

NOTES:
1. ALL EXISTING EXCAVATED MATERIAL THAT IS NOT TO BE REUSED IN THE WORK IS TO BE IMMEDIATELY REMOVED FROM THE SITE AND PROPERLY DISPOSED OF.

2. SOIL/AGGREGATE STOCKPILE SITES TO BE WHERE SHOWN ON THE DRAWINGS.

3. RESTORE STOCKPILE SITES TO PRE–EXISTING PROJECT CONDITION AND RESEED AS REQUIRED.

4. STOCKPILE HEIGHTS MUST NOT EXCEED 35'. STOCKPILE SLOPES MUST BE 2:1 OR FLATTER.

MATERIALS STOCKPILE DETAIL

N.T.S. BLEC–006

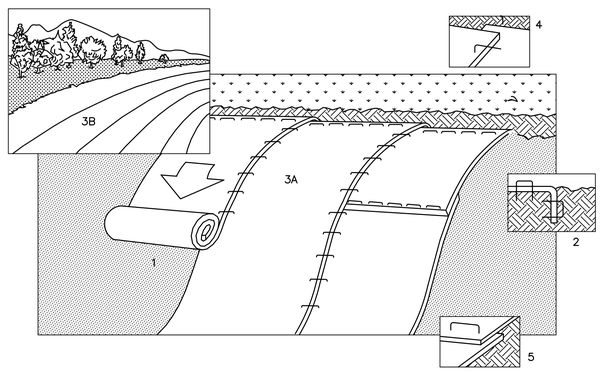

1. PREPARE SOIL BEFORE INSTALLING BLANKETS, INCLUDING APPLICATION OF LIME, FERTILIZER,AND SEED.

2. BEGIN AT THE TOP OF THE SLOPE BY ANCHORING THE BLANKET IN 6" DEEP X 6" WIDE TRENCH. BACKFILL AND COMPACT THE TRENCH AFTER STAPLING.

3. ROLL THE BLANKETS (A.) DOWN OR (B.) HORIZONTALLY ACROSS THE SLOPE.

4. THE EDGES OF PARALLEL BLANKETS MUST BE STAPLED WITH APPROXIMATELY 2" OVERLAP.

5. WHEN BLANKETS MUST BE SPLICED DOWN THE SLOPE, PLACE BLANKETS END OVER END (SHINGLE STYLE) WITH APPROXIMATELY 4" OVERLAP. STAPLE THROUGH OVERLAPPED AREA, APPROXIMATELY 12" APART.

SLOPE STABILIZATION DETAIL

N.T.S. BLEC–010

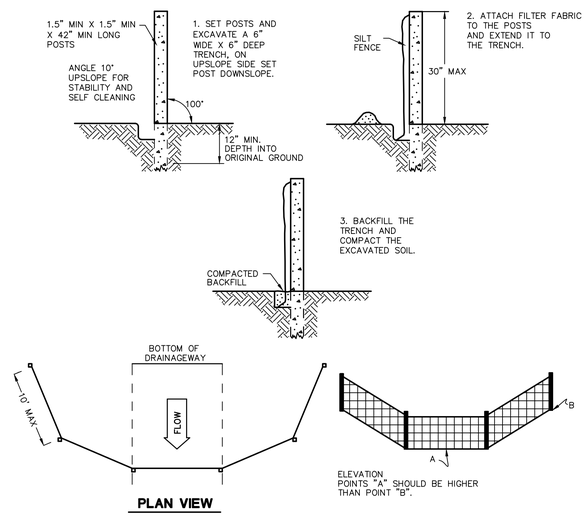

SILT FENCE BARRIER

N.T.S. CTEC–003

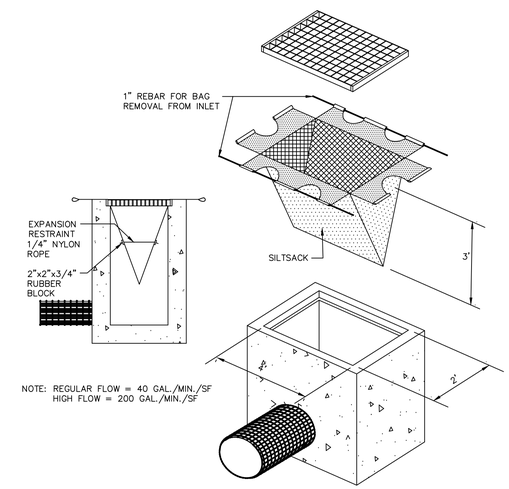

NOTE: REGULAR FLOW = 40 GAL./MIN./SF
HIGH FLOW = 200 GAL./MIN./SF

SILTSACK DETAIL

N.T.S. BLEC–005

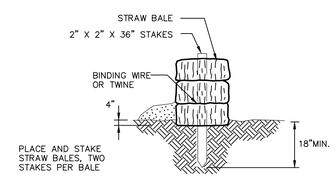

STRAW BALE BARRIERS SHOULD NOT BE USED FOR MORE THAN 3 MONTHS

SEDIMENT MUST BE REMOVED WHEN ACCUMULATIONS REACH 1/3 THE ABOVE GROUND HEIGHT OF THE BARRIER.

ANY SECTION OF STRAW BALE BARRIER WHICH HAS BEEN UNDERMINED OR TOPPED MUST BE IMMEDIATELY REPLACED WITH A ROCK FILTER OUTLET.

STRAW BALE DETAIL

N.T.S. BLEC–007

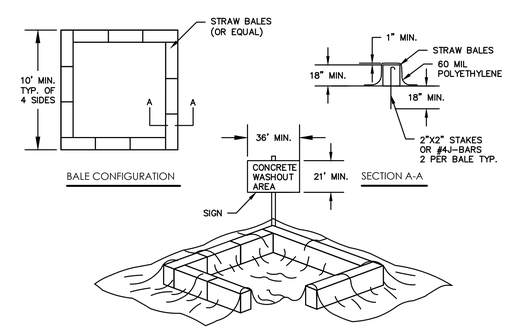

CONCRETE WASH PIT

N.T.S.

NOT FOR CONSTRUCTION
FOR PERMITTING PURPOSES ONLY

© 2020 BL COMPANIES, INC. THESE DRAWINGS SHALL NOT BE UTILIZED BY ANY PERSON, FIRM OR CORPORATION WITHOUT THE SPECIFIC WRITTEN PERMISSION OF BL COMPANIES.

Architecture
Engineering
Environmental
Land Surveying
BL Companies
355 Research Parkway
Meriden, CT 06450
(203) 630-1406
(203) 630-2615 Fax

Garden Homes

ROSE EQUITIES
Owner-Builders since 1949

STATE OF CONNECTICUT
CHRISTOPHER R. GAUDIO
No. 27798
LICENSED
PROFESSIONAL ENGINEER

THE RESIDENCES AT MAIN
K & K DEVELOPERS, INC.
5085 MAIN STREET
TRUMBULL, CONNECTICUT

REVISIONS

No.	Date	Desc.
1.	6/30/2020	REVISED PER STAFF COMMENTS
2.	8/10/2020	REVISED PER STAFF COMMENTS

Designed	A.T.K.
Drawn	A.T.K.
Reviewed	J.J.S.
Scale	NONE
Project No.	1800513
Date	05/28/2020

CAD File: EC180051301

Title
SEDIMENT AND EROSION CONTROL DETAILS

Sheet No.
EC-3

Xref (s): BD180051301 ; XY180051301 ; XC180051301 ; XY05C13B01 ; XY180051302 ; XC180051302 ; XC180051304 ; ED180051301 ; XC180051303

8/17/2020 JSCUKA G:\CPROJ\BYGAN\180513\DWG\EC180051301.DWG EC-3 PAGE

* WHERE SEDIMENTS CONTAIN LESS THAN 80% SAND, A 100 FT MINIMUM IS REQUIRED.

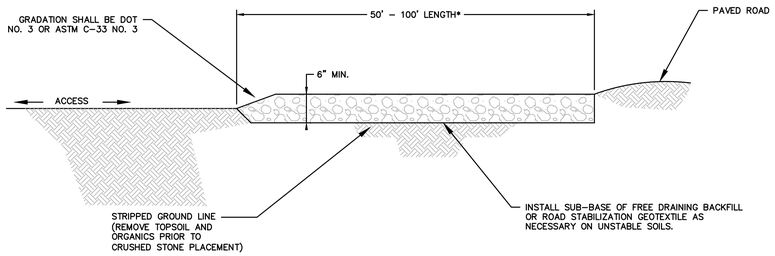

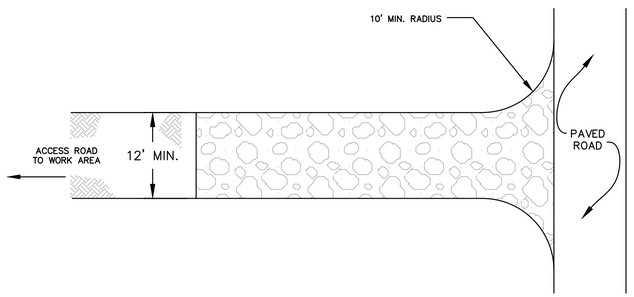

TYPICAL CONSTRUCTION ENTRANCE

N.T.S. CT DEEP CE-2

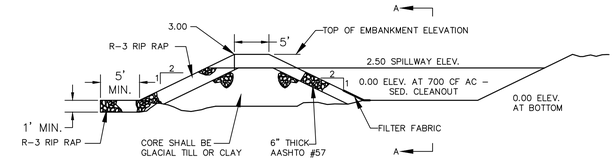

NOTE:
THE OUTLET EMBANKMENT SHELL IS TO BE ENTIRELY OF ROCK. THE DOWNSTREAM SLOPE SHOULD BE LARGER ROCK (R-3) WITH AN UPSTREAM LAYER OF SMALLER STONE (AASHTO #57)

SECTION THROUGH SEDIMENT TRAP EMERGENCY SPILLWAY OUTLET

N.T.S. BLEC-004

SILTSACK DETAIL

N.T.S. BLEC-005

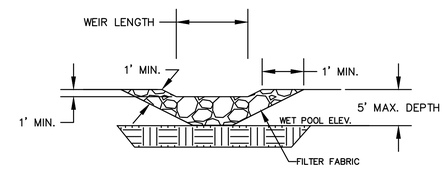

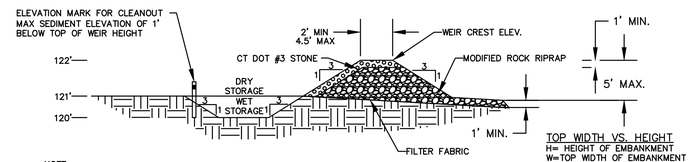

NOTE:
1. ALL DETAIL INFORMATION SHOULD BE USED AS A GUIDELINE. ALL TEMPORARY SEDIMENT TRAPS MUST CONFORM TO THE CT DEEP 2002 GUIDELINES FOR SOIL EROSION AND SEDIMENT CONTROL MANUAL.
2. THE VOLUME OF THE WET STORAGE SHALL BE AT LEAST TWICE THE VOLUME OF THE SEDIMENT STORAGE VOLUME AND SHALL BE DESIGNED TO A MINIMUM DEPTH OF 2 FEET, PER CT DEEP 2002 CONNECTICUT GUIDELINES FOR SOIL EROSION AND SEDIMENT CONTROL MANUAL.

TOP WIDTH VS. HEIGHT
H= HEIGHT OF EMBANKMENT
W=TOP WIDTH OF EMBANKMENT

H(ft)	W (ft)
1.5	2.0
2.0	2.0
2.5	2.5
3.0	2.5
3.5	3.0
4.0	3.0
4.5	4.0
5.0	4.5

TEMPORARY SEDIMENT TRAP

N.T.S. BLEC-002

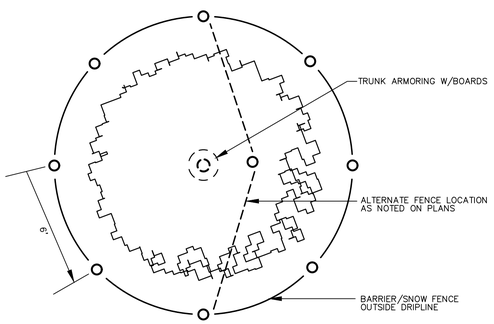

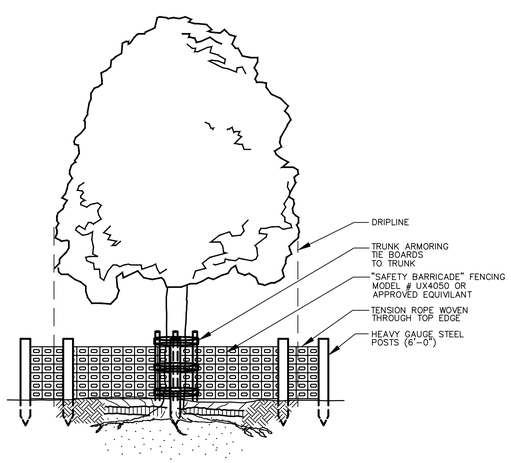

TREE PROTECTION

N.T.S. BLLD-001

NOTES:
USE FOR IN-STREAM OR SWALE SEDIMENT INTERCEPTION.

LOCATE NOT TO BACKWATER ONTO WORK AREA.

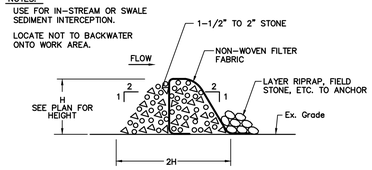

CROSS SECTION

STONE CHECK DAM WITH FILTER FABRIC

N.T.S.

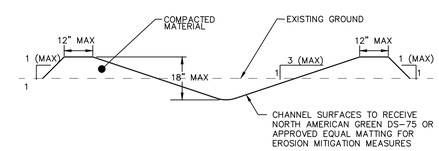

NON-ENGINEERED TEMPORARY DIVERSION DITCH DETAIL

N.T.S.

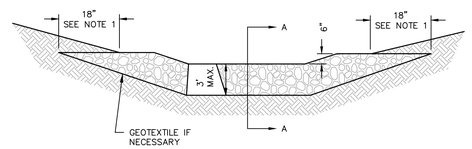

VIEW LOOKING UPSTREAM
(NOT TO SCALE)

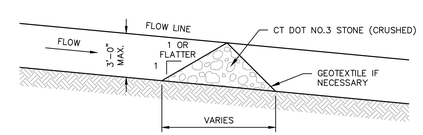

SECTION A–A
(NOT TO SCALE)

NOTES:
1) KEY STONE INTO THE DITCH BANKS AND EXTEND INTO THE ABUTMENTS A MINIMUM OF 18" TO PREVENT FLOW FROM FLANKING THE CHECK DAM.

2) THE MINIMUM DESIGN CAPACITY SHALL CONVEY A 2 YEAR – 24 HOUR PEAK FLOW.

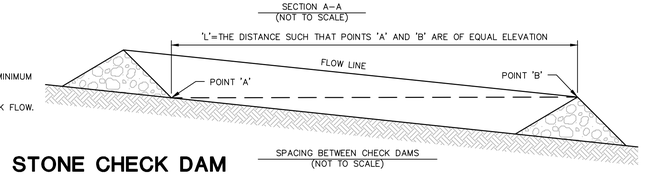

SPACING BETWEEN CHECK DAMS
(NOT TO SCALE)

STONE CHECK DAM INSTALLATION IN DRAINAGEWAYS

N.T.S. FIGURE SCD-2

NOT FOR CONSTRUCTION
FOR PERMITTING PURPOSES ONLY

© 2020 BL COMPANIES, INC. THESE DRAWINGS SHALL NOT BE UTILIZED BY ANY PERSON, FIRM OR CORPORATION WITHOUT THE SPECIFIC WRITTEN PERMISSION OF BL COMPANIES.

Architecture
Engineering
Environmental
Land Surveying
BL Companies
355 Research Parkway
Meriden, CT 06450
(203) 630-1406
(203) 630-2615 Fax

Garden Homes

ROSE EQUITIES
Owner-Builders since 1949

STATE OF CONNECTICUT
CHRISTOPHER B. GAUDIO
No. 27798
LICENSED
PROFESSIONAL ENGINEER

THE RESIDENCES AT MAIN
K & K DEVELOPERS, INC.
5085 MAIN STREET
TRUMBULL, CONNECTICUT

REVISIONS

No.	Date	Desc.
1.	6/30/2020	REVISED PER STAFF COMMENTS
2.	8/10/2020	REVISED PER STAFF COMMENTS

Designed	A.T.K.
Drawn	A.T.K.
Reviewed	J.J.S.
Scale	NONE
Project No.	1800513
Date	05/28/2020
CAD File: EC180051301	

Title
SEDIMENT AND EROSION CONTROL DETAILS

Sheet No.
EC-4

Xref (s): : BD180051301 ; XY180051301 ; XC180051301 ; XYOSC153801 ; XY180051302 ; XC180051302 ; XC180051304 ; ED180051301 ; XC180051303

8/17/2020, JED JKA, JDA, JCB:S:\JOBS\BSA\1800513\DWG\EC180051301.DWG EC-4 PAGE

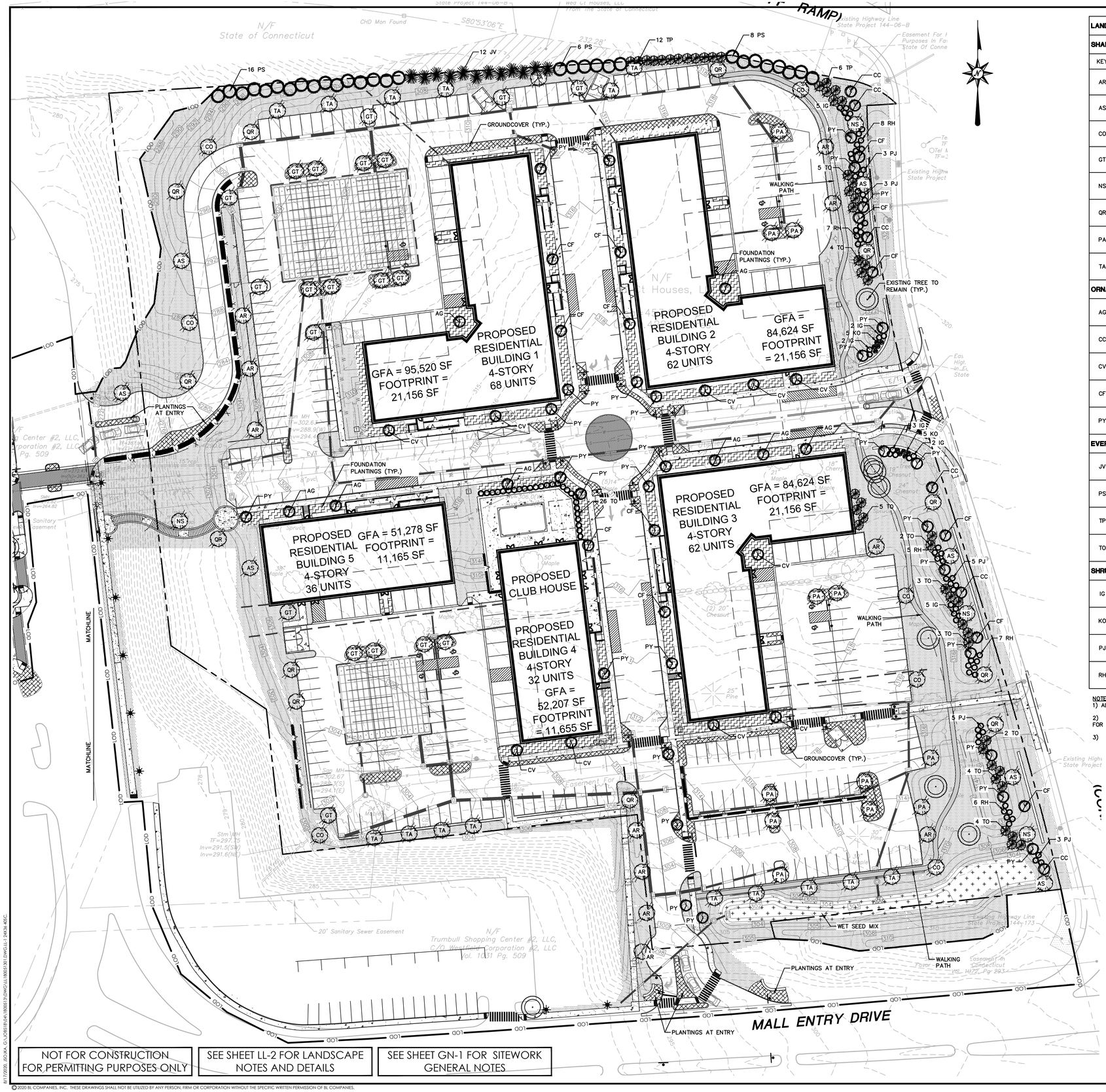

NOT FOR CONSTRUCTION FOR PERMITTING PURPOSES ONLY

SEE SHEET LL-2 FOR LANDSCAPE NOTES AND DETAILS

SEE SHEET GN-1 FOR SITEWORK GENERAL NOTES

LANDSCAPE PLANT SCHEDULE

SHADE TREES

KEY	QTY	BOTANICAL NAME	COMMON NAME	ROOT	SIZE	COMMENTS
AR	11	Acer rubrum 'Franksred'	RED SUNSET RED MAPLE	B&B OR CONT.	3" CAL. MIN.	6' MIN. BRANCH HT.
AS	7	Acer saccharum 'Green Mountain'	GREEN MOUNTAIN SUGAR MAPLE	B&B	3" CAL. MIN.	6' BRANCH HT. MIN.
CO	7	Celtis occidentalis	HACKBERRY	B&B	3" CAL. MIN.	6' BRANCH HT. MIN.
GT	20	Gleditsia triacanthos var. inermis 'Shademaster'	SHADEMASTER HONEYLOCUST	B&B	3" CAL. MIN.	6' BRANCH HT. MIN.
NS	6	Nyssa sylvatica	BLACK GUM	B&B	3" CAL. MIN.	6' BRANCH HT. MIN.
QR	12	Quercus rubra	RED OAK	B&B	3" CAL. MIN.	6' BRANCH HT. MIN.
PA	12	Platanus x acerifolia 'Morton's Circle'	EXCLAMATION! PLANETREE	B&B	3" CAL. MIN.	6' BRANCH HT. MIN.
TA	16	Tilia americana 'Redmond'	AMERICAN LINDEN	B&B	3" CAL. MIN.	6' BRANCH HT. MIN.

ORNAMENTAL FLOWERING TREES

KEY	QTY	BOTANICAL NAME	COMMON NAME	ROOT	SIZE	COMMENTS
AG	8	Amelanchier x grandiflora 'Autumn Brilliance'	APPLE SERVICEBERRY	B&B	8" HT. MIN.	MULTI-STEM
CC	6	Cercis canadensis	EASTERN REDBUD	B&B	2" CAL. MIN.	5' BRANCH HT. MIN.
CV	10	Chionanthus virginicus	WHITE FRINGE TREE	B&B	2" CAL. MIN.	5' BRANCH HT. MIN.
CF	13	Cornus florida 'Cherokee Princess'	FLOWERING DOGWOOD	B&B	2" CAL. MIN.	5' BRANCH HT. MIN.
PY	30	Prunus x yedoensis 'Akebono'	YOSHINO CHERRY	B&B	2" CAL. MIN.	5' BRANCH HT. MIN.

EVERGREEN TREES

KEY	QTY	BOTANICAL NAME	COMMON NAME	ROOT	SIZE	COMMENTS
JV	12	Juniperus virginiana 'Canaertii'	EASTERN RED CEDAR	B&B	6' HT. MIN.	PLANT 10' O.C.
PS	30	Pinus strobus	EASTERN WHITE PINE	B&B	6' HT. MIN.	PLANT 10' O.C.
TP	18	Thuja plicata 'Green Giant'	GREEN GIANT ARBORVITAE	B&B	6' HT. MIN.	PLANT 10' O.C.
TO	58	Thuja occidentalis 'Techny'	TECHNY ARBORVITAE	B&B OR CONT.	6' HT. MIN.	PLANT 6' O.C.

SHRUBS

KEY	QTY	BOTANICAL NAME	COMMON NAME	ROOT	SIZE	COMMENTS
IG	19	Ilex glabra 'Compacta'	COMPACT INKBERRY	CONT.	30" HT. MIN.	PLANT 4' O.C.
KO	10	Rosa x 'KNOCK OUT'	KNOCK OUT ROSE	CONT.	30" HT. MIN.	PLANT 4' O.C.
PJ	19	Pieris japonica 'Mountain Fire'	MOUNTAIN FIRE ANDROMEDA	CONT.	30" HT. MIN.	PLANT 5' O.C.
RH	33	Rhododendron 'Janet Blair'	JANET BLAIR RHODODENDRON	CONT.	30" HT. MIN.	PLANT 5' O.C.

NOTES:

1) ALL SUBSTITUTIONS MUST RECEIVE APPROVAL FROM THE LANDSCAPE ARCHITECT PRIOR TO DELIVERY TO SITE.

2) PROVIDE AND INSTALL ALL PLANTS SHOWN ON THE PLANTING PLAN DRAWINGS; THE QUANTITIES IN THE PLANT LIST ARE PROVIDED FOR THE CONTRACTOR'S CONVENIENCE ONLY. IF DISCREPANCIES OCCUR, THE LARGER QUANTITY SHALL APPLY.

3) IF THERE IS A DISCREPANCY BETWEEN BOTANICAL AND COMMON NAME, BOTANICAL NAME PREVAILS.

LEGEND

PATTERN	DESCRIPTION
	LAWN SEED MIX (REFER TO SEED MIXES ON SHEET LL-2)
	FOUNDATION PLANTINGS
	GROUNDCOVER PLANTINGS
	WET SEED MIX (REFER TO SEED MIXES ON SHEET LL-2)
	EXISTING TREE TO REMAIN

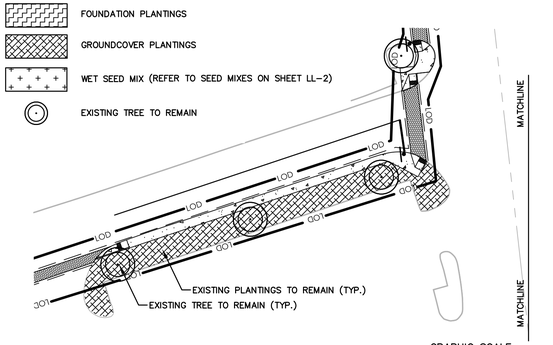

GRAPHIC SCALE

40 20 0 40

SCALE IN FEET

Architecture
Engineering
Environmental
Land Surveying

BL Companies

355 Research Parkway
Meriden, CT 06450
(203) 630-1406
(203) 630-2615 Fax

Garden Homes

ROSE EQUITIES
Owner-Builders since 1949

STATE OF CONNECTICUT · CHRISTOPHER B. GAUDIO · No. 27798 · LICENSED PROFESSIONAL ENGINEER

THE RESIDENCES AT MAIN
K & K DEVELOPERS, INC.
5085 MAIN STREET
TRUMBULL, CONNECTICUT

REVISIONS

No.	Date	Desc.
1.	6/30/2020	REVISED PER STAFF COMMENTS
2.	8/10/2020	REVISED PER STAFF COMMENTS

Designed	L.M.W.
Drawn	L.M.W.
Reviewed	J.J.S.
Scale	1"=40'
Project No.	1800513
Date	05/28/2020
CAD File: LL180051301	

Title

LANDSCAPE PLAN

Sheet No.

LL-1

Xref (s): : BD180051301 ; XY180051301 ; XC180051301 ; XY05C13381 ; XY180051302 ; XC180051303 ; XL180051301 ; XC180051301-COLOR

8/17/2020, J:\BDJOA, CA\2018\BDJOA.180051\DWG\LL180051301.DWG\LL1-2\BDJOA.ARCH

© 2020 BL COMPANIES, INC. THESE DRAWINGS SHALL NOT BE UTILIZED BY ANY PERSON, FIRM OR CORPORATION WITHOUT THE SPECIFIC WRITTEN PERMISSION OF BL COMPANIES.

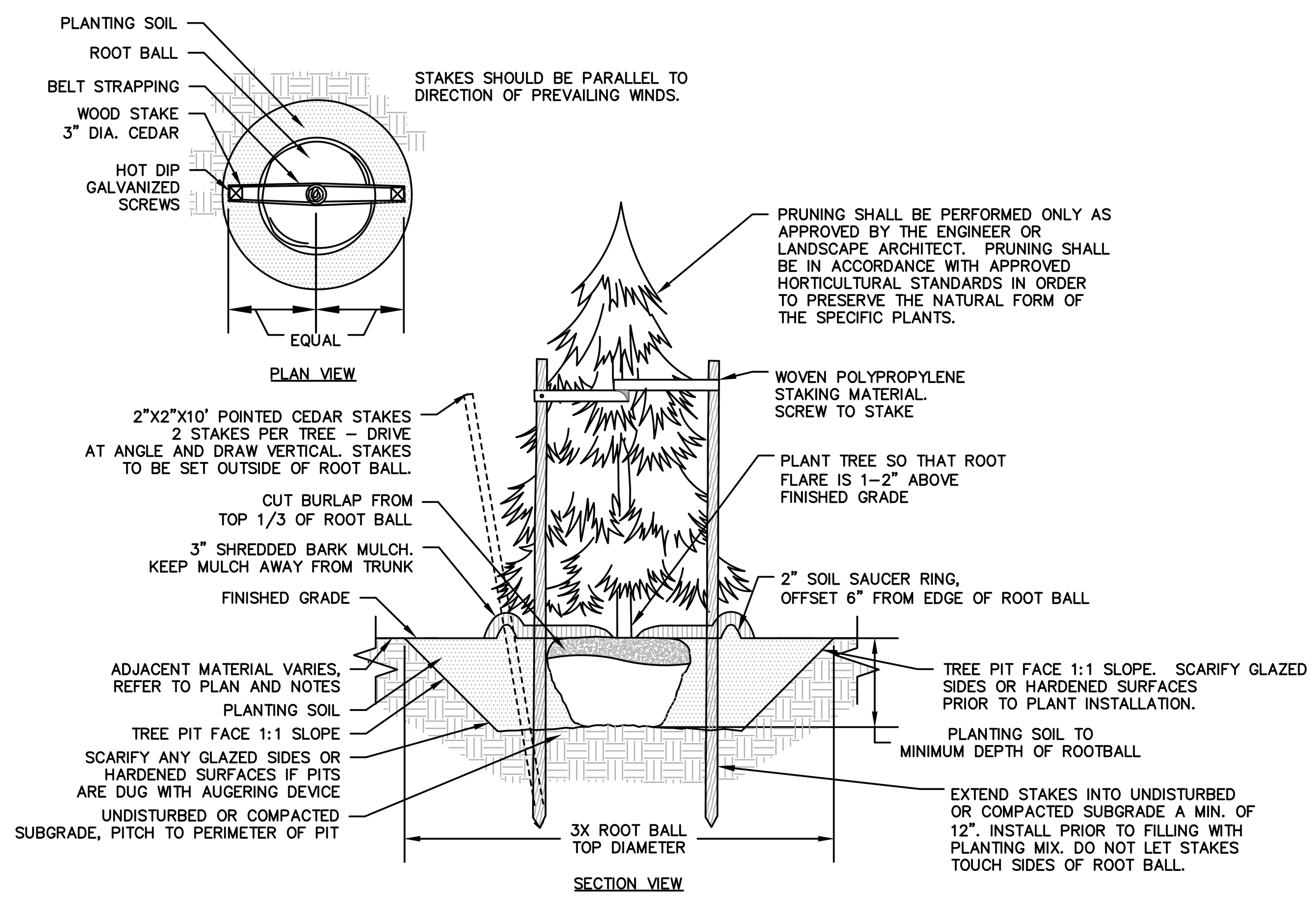

NOTES:
1. STAKING FOR TREES ON 4:1 SLOPES OR LESS TO BE PERFORMED AT CONTRACTOR'S DISCRETION.
2. WOVEN POLYPROPYLENE STAKING MATERIAL SHALL BE DEEPROOT ARBORTIE (GREEN) OR APPROVED EQUIVALENT. MATERIAL SHALL BE LOOPED AROUND TREE THROUGH EACH OTHER, TWISTED, AND SECURED TO THE STAKE. INSTALL SPECIFIED MATERIAL IN ACCORDANCE WITH MANUFACTURER'S DIRECTIONS.
3. BEFORE IN HOLE, REMOVE BOTTOM OF CAGE. ONCE IN HOLE, REMOVE REST OF CAGE FROM ROOT BALL. REMOVE TWINE AND BURLAP FROM TOP 1/3 OF ROOT BALL – SCORE REMAINING 2/3 OF BURLAP. IF BURLAP IS SYNTHETIC OR HAS BEEN TREATED WITH ANTI-DESSICENT, COMPLETELY REMOVE IT FROM ROOT BALL.

EVERGREEN TREE PLANTING

N.T.S

SEED MIX NOTES

A. LAWN SEEDING MIX:
15 % PERENNIAL RYEGRASS (BLEND OF 3 IMPROVED HYBRIDS)
25 % FINE LEAF OR CREEPING FESCUE (BLEND OF 3 IMPROVED HYBRIDS)
60 % KENTUCKY BLUEGRASS (BLEND OF 3 IMPROVED HYBRIDS)
SEEDING RATE: 5 LBS/1,000 S.F.
SEEDING DATES: AUGUST 15 – OCTOBER 1 AND APRIL 15 – JUNE 30 UNLESS OTHERWISE APPROVED BY THE OWNER OR LANDSCAPE ARCHITECT.

B. WET SEED MIX –
NEW ENGLAND WETMIX (WET SEED MIX)
NEW ENGLAND WETLAND PLANTS INC. OR APPROVED EQUAL

SPECIES: FOX SEDGE (CAREX VULPINOIDEA), LURID SEDGE (CAREX LURIDA), BLUNT BROOM SEDGE (CAREX SCOPARIA), BLUE VERVAIN (VERBENA HASTATA), FOWL BLUEGRASS (POA PALUSTRUS), HOP SEDGE (CAREX LUPULINA), GREEN BULRUSH (SCIRPUS ATROVIRENS), CREEPING SPIKE RUSH (ELEOCHARIS PALUSTRIS), FRINGED SEDGE (CAREX CRINITA), SOFT RUSH (JUNCUS EFFUSUS), SPOTTED JOE PYE WEED (EUPATORIUM MACULATUM), RATTLESNAKE GRASS (GLYCERIA CANADENSIS), SWAMP ASTER (ASTER PUNICEUS), BLUEFLAG (IRIS VERSICOLOR), SWAMP MILKWEED (ASCLEPIAS INCARNATA), MONKEY FLOWER (MIMULUS RINGENS).

APPLICATION RATE: 20 LBS/ACRE AT STORMWATER PONDS
SEEDING DATES: AUGUST 15 – OCTOBER 1 AND APRIL 15 – JUNE 30
UNLESS OTHERWISE APPROVED BY THE OWNER OR LANDSCAPE ARCHITECT.

SEEDING DATES: AUGUST 15 – OCTOBER 1 AND APRIL 15 – JUNE 30
UNLESS OTHERWISE APPROVED BY THE OWNER OR LANDSCAPE ARCHITECT.

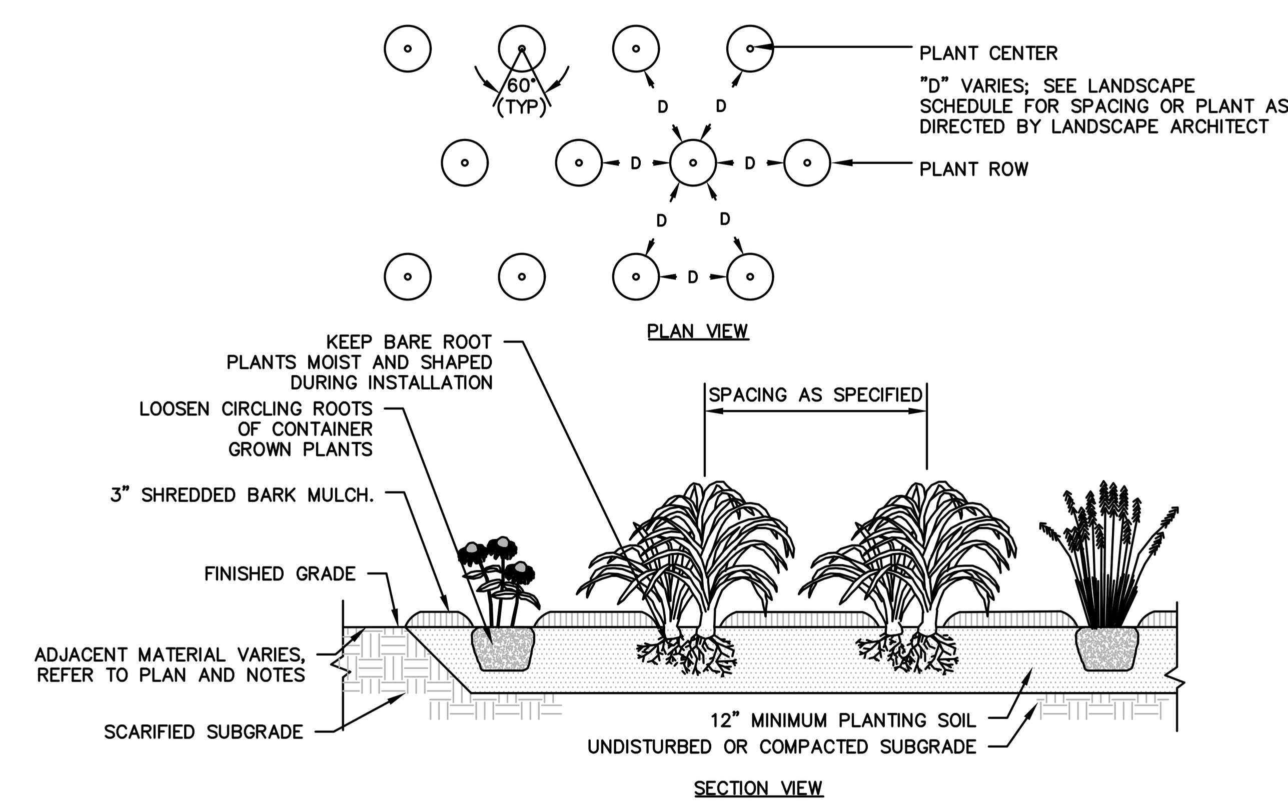

GROUNDCOVER PLANTING

N.T.S

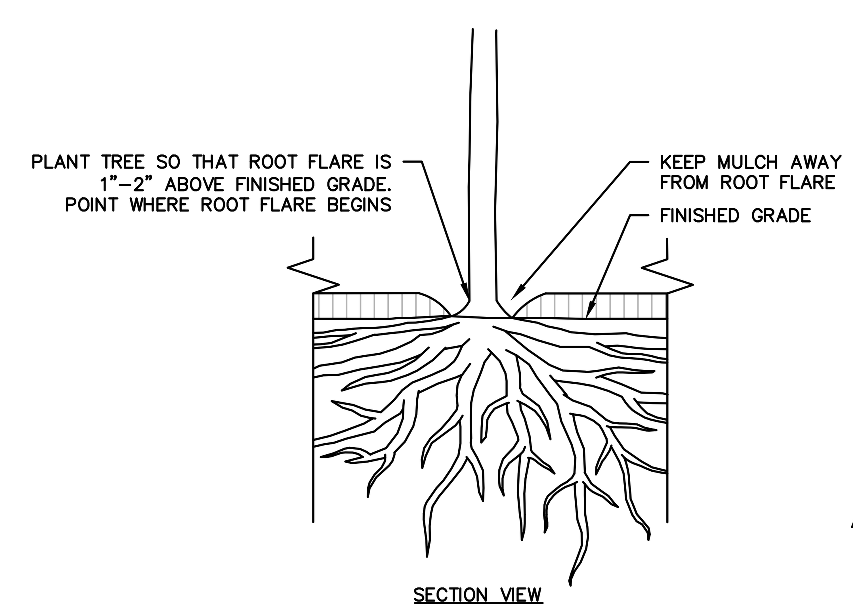

ROOT FLARE DIAGRAM

N.T.S

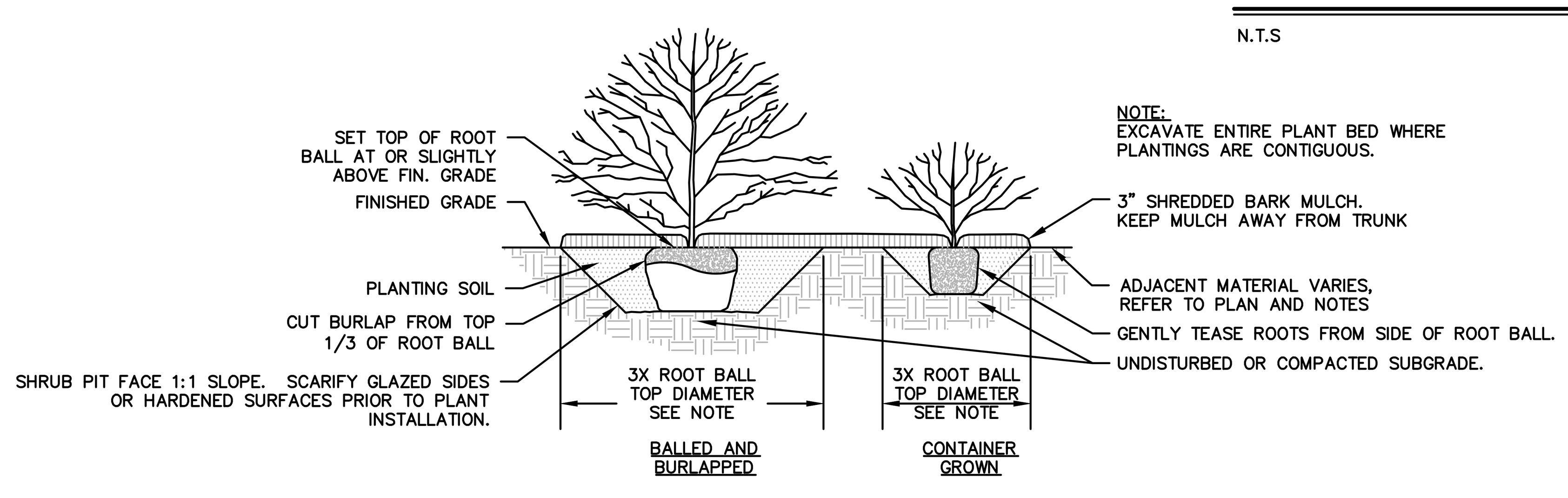

SHRUB PLANTING

N.T.S

NOT FOR CONSTRUCTION
FOR PERMITTING PURPOSES ONLY

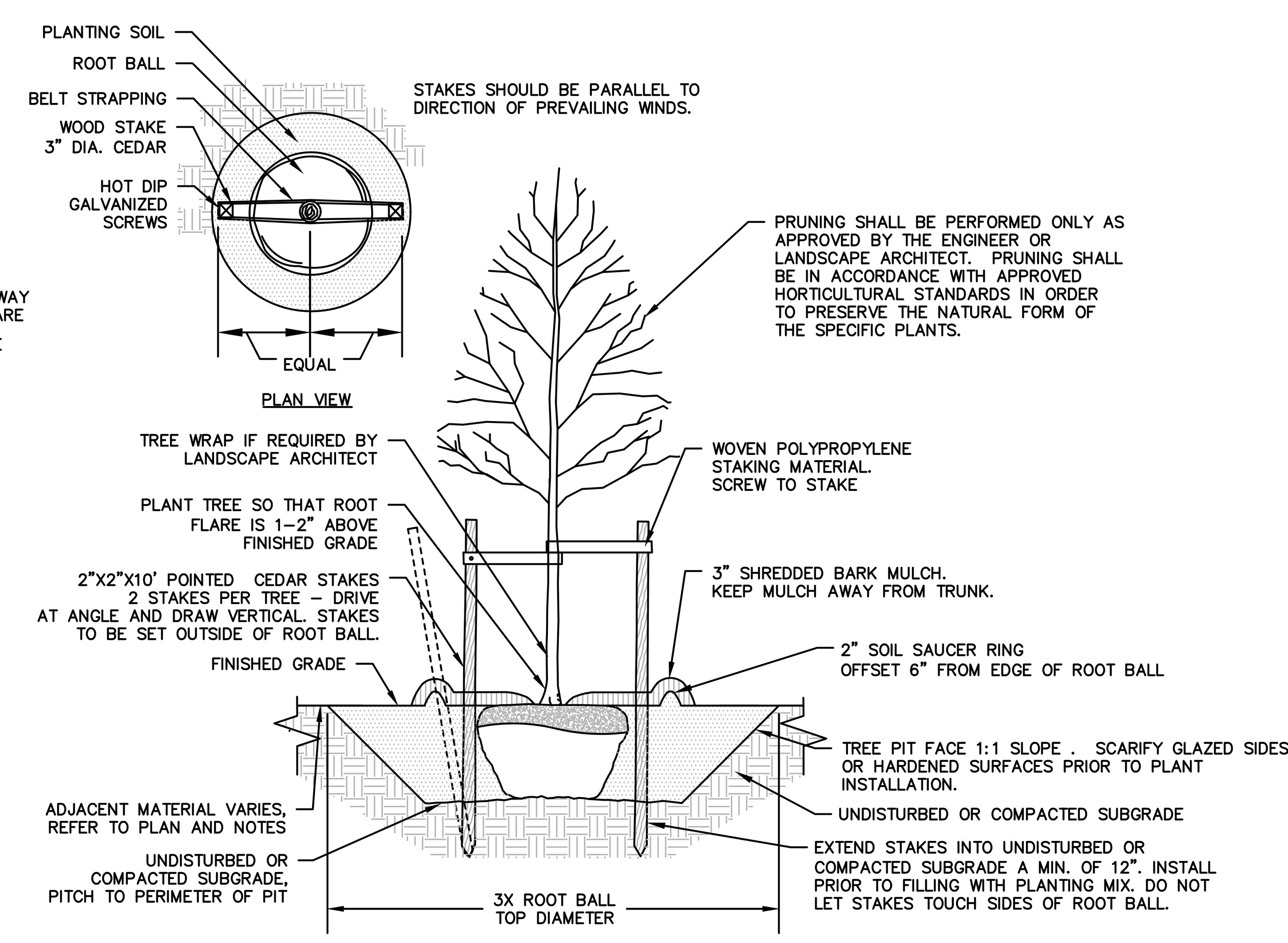

NOTES:
1. STAKING FOR TREES ON 4:1 SLOPES OR LESS THAN 3" CALIPER TO BE PERFORMED AT CONTRACTORS DISCRETION.
2. WOVEN POLYPROPYLENE STAKING MATERIAL SHALL BE DEEPROOT ARBORTIE (GREEN) OR APPROVED EQUIVALENT. MATERIAL SHALL BE LOOPED AROUND TREE THROUGH EACH OTHER, TWISTED, AND SECURED TO THE STAKE. INSTALL SPECIFIED MATERIAL IN ACCORDANCE WITH MANUFACTURER'S DIRECTIONS.
3. BEFORE IN HOLE, REMOVE BOTTOM OF CAGE. ONCE IN HOLE, REMOVE REST OF CAGE FROM ROOT BALL. REMOVE TWINE AND BURLAP FROM TOP 1/3 OF ROOT BALL – SCORE REMAINING 2/3 OF BURLAP. IF BURLAP IS SYNTHETIC OR HAS BEEN TREATED WITH ANTI-DESSICANT, COMPLETELY REMOVE IT FROM ROOT BALL.

DECIDUOUS TREE PLANTING

N.T.S

LANDSCAPE NOTES

1. THE LANDSCAPE PLAN AND DETAIL SHEET ARE FOR LANDSCAPING INFORMATION ONLY. REFER TO THE OTHER PLANS FOR ALL OTHER INFORMATION.

2. COORDINATE PLANT MATERIAL LOCATIONS WITH SITE UTILITIES. UTILITY LOCATIONS SHOWN ON THE DRAWINGS ARE APPROXIMATE. EXERCISE CARE WHEN DIGGING IN AREAS OF POTENTIAL CONFLICT WITH UNDERGROUND OR OVERHEAD UTILITIES. THE CONTRACTOR IS RESPONSIBLE FOR ANY DAMAGE DUE TO CONTRACTOR'S NEGLIGENCE AND SHALL REPLACE OR REPAIR ANY DAMAGE AT CONTRACTOR'S EXPENSE. PRIOR TO DIGGING AND INSTALLATION OF PLANT MATERIAL, THE CONTRACTOR SHALL CONTACT "CALL BEFORE YOU DIG" 72 HOURS BEFORE COMMENCEMENT OF WORK AT "(800)922–4455" AND VERIFY ALL UTILITY SYSTEM LOCATIONS.

3. THE LOCATIONS FOR PLANT MATERIAL ARE APPROXIMATE AND ARE SUBJECT TO FIELD ADJUSTMENT DUE TO UTILITY LOCATIONS AND SITE CONDITIONS. THE CONTRACTOR SHALL ACCURATELY STAKE OUT THE LOCATIONS FOR ALL PLANTS FOR THE REVIEW, ADJUSTMENT, AND APPROVAL BY OWNER OR LANDSCAPE ARCHITECT PRIOR TO PLANTING.

4. THE CONTRACTOR SHALL GUARANTEE THAT ALL PLANTS SHALL BE HEALTHY AND FREE OF DISEASE FOR A PERIOD OF ONE YEAR OR JUNE 1ST OF THE YEAR FOLLOWING INSTALLATION, WHICHEVER IS LONGER, AFTER SUBSTANTIAL COMPLETION AND ACCEPTANCE BY OWNER OR LANDSCAPE ARCHITECT. CONTRACTOR SHALL REPLACE ANY DEAD OR UNHEALTHY PLANTS AT CONTRACTOR'S EXPENSE. PLANT MATERIAL REPLACEMENTS SHALL BE GUARANTEED FOR ONE FULL YEAR FROM DATE OF REPLACEMENT. REPLACEMENT PLANTS SHALL BE THE SAME AS SPECIFIED FOR THE ORIGINAL PLANTING. REPLACEMENTS SHALL BE MADE AS MANY TIMES AS NECESSARY TO ENSURE HEALTHY PLANTS. FINAL ACCEPTANCE SHALL BE MADE IF ALL PLANTS MEET THE GUARANTEE REQUIREMENTS INCLUDING MAINTENANCE. MAINTENANCE RESPONSIBILITIES INCLUDE CULTIVATING, SPRAYING, WEEDING, WATERING, TIGHTENING GUYS, PRUNING, FERTILIZING, MULCHING, AND ANY OTHER OPERATIONS NECESSARY TO MAINTAIN PLANT VIABILITY. MAINTENANCE SHALL BEGIN IMMEDIATELY AFTER PLANTING AND CONTINUE UNTIL THE END OF THE GUARANTEE PERIOD. DURING THE LANDSCAPE MAINTENANCE PERIOD (GUARANTEE) THE LANDSCAPE CONTRACTOR SHALL NOTIFY THE OWNER IN WRITING OF ANY SITE CONSTRAINTS (PHYSICAL, ENVIRONMENT, ETC.) OR MAINTENANCE DEFICIENCIES THAT MAY AFFECT LANDSCAPE VEGETATION ESTABLISHMENT.

5. THE CONTRACTOR SHALL SUPPLY ALL LABOR, PLANTS, AND MATERIALS IN QUANTITIES SUFFICIENT TO COMPLETE THE WORK SHOWN ON THE DRAWINGS AND LISTED IN THE PLANT SCHEDULE. IN THE EVENT OF A DISCREPANCY BETWEEN QUANTITIES SHOWN IN THE PLANT SCHEDULE AND THOSE REQUIRED BY THE DRAWINGS, THE LARGER SHALL APPLY. ALL PLANTS SHALL BE ACCLIMATED BY THE SUPPLY NURSERY TO THE LOCAL HARDINESS ZONE AND BE CERTIFIED THAT THE PLANTING MATERIAL HAS BEEN GROWN FOR A MINIMUM OF TWO YEARS AT THE SOURCE AND OBTAINED WITHIN 200 MILES OF PROJECT SITE UNLESS OTHERWISE APPROVED BY OWNER OR LANDSCAPE ARCHITECT.

6. PLANTS SHALL HAVE TAGS THAT IDENTIFY PLANT GENUS, SPECIES, CULTIVAR (IF APPLICABLE), PLANT COMMON NAME, NAME OF SOURCE NURSERY, AND SIZE OF PLANT FOR REVIEW OF OWNER OR LANDSCAPE ARCHITECT.

7. NO PLANT SHALL BE PLACED IN THE GROUND BEFORE ROUGH GRADING HAS BEEN COMPLETED AND APPROVED BY THE OWNER OR LANDSCAPE ARCHITECT. STAKING THE LOCATION OF ALL TREES AND SHRUBS SHALL BE COMPLETED PRIOR TO PLANTING FOR APPROVAL BY THE OWNER OR LANDSCAPE ARCHITECT.

8. FINAL GRADES SHALL BLEND SMOOTHLY WITH EXISTING GRADES, AND TOP AND BOTTOM OF SLOPES SHALL BE ROUNDED.

9. ALL TREE AND SHRUB MASSINGS SHALL BE MULCHED TO A DEPTH OF 3". ANNUAL AND PERENNIAL BEDS SHALL BE MULCHED TO A DEPTH OF 2". MULCH SHALL BE UNCOLORED TRIPLE–SHREDDED HARDWOOD BARK MULCH, AGED AT LEAST 6 MONTHS.

10. IF TREE STAKING IS PROPOSED, TREE STAKING MUST BE COMPLETED THE SAME DAY AS THE TREE IS INSTALLED. ALL TREES SHALL BE STAKED OR GUYED PER DETAIL.

11. LANDSCAPE PLANTING AREAS MUST BE FREE DRAINING. PAVEMENT, COMPACTED SUBGRADE, DEAD OR DYING PLANT MATERIAL, BLASTED ROCK, STONES GREATER THAN 1" IN DIAMETER, AND ANY OTHER MATERIAL HARMFUL TO PLANT GROWTH AND DEVELOPMENT SHALL BE REMOVED FROM AREAS TO BE LANDSCAPED AS REQUIRED BY PLANTING DETAILS OR SPECIFICATIONS.

12. PLANTING SOIL:

DEPTH: PLANTING SOIL SHALL BE INSTALLED AT A MINIMUM DEPTH OF 4" OR AS NOTED IN THE LANDSCAPE DETAILS. PLANTING SOIL SHALL BE UTILIZED IN ALL PLANTING AREAS INCLUDING SEEDED AREAS.

TESTING: CONTRACTOR SHALL SUBMIT (2) SOIL SAMPLES PER SOIL STOCKPILE TO A CERTIFIED TESTING LABORATORY TO DETERMINE ACIDITY, ORGANIC CONTENT, MECHANICAL ANALYSIS, AVAILABLE NUTRIENTS (N,P,K,Ca,Mg,S,Fe,Mn,Zn,Cu,B,Al,Pb) AND NECESSARY AMENDMENTS TO SOIL. THE CONTRACTOR SHALL SUBMIT THE TEST RESULTS TO THE OWNER OR LANDSCAPE ARCHITECT FOR REVIEW AND APPROVAL. TEST RESULTS SHALL RECOMMEND AMENDMENTS THAT WILL ALTER THE SOIL CHARACTERISTICS SUCH THAT THE CHARACTERISTICS DESCRIBED BELOW ARE ACHIEVED AND THE SPECIFIED PLANTS (CONTRACTOR TO PROVIDE LIST TO TESTING LABORATORY) WILL ACHIEVE PROPER GROWTH THAT IS NEITHER DEFICIENT NOR EXCESSIVE. THE CONTRACTOR SHALL INCORPORATE THESE AMENDMENTS AT NO INCREASE IN CONTRACT PRICE.

CHARACTERISTICS: PLANTING SOIL MAY CONSIST OF EXISTING ON–SITE SOILS, AMENDED ON–SITE SOILS, OR IMPORTED SOILS MEETING THE FOLLOWING CRITERIA:

A. NOT TO CONTAIN MATERIALS HARMFUL TO PLANT LIFE, TO BE CLEAN, FERTILE, FRIABLE, AND WELL DRAINING. ALL PLANTING SOIL SHALL BE FREE OF ANY SUBSOIL EARTH CLODS, SODS, STONES OVER 1" IN ANY DIMENSION, STICKS, ROOTS, WEEDS, LITTER AND OTHER DELETERIOUS MATERIAL. PLANTING SOIL SHALL BE UNIFORM IN QUALITY AND TEXTURE.
B. PLANTING SOIL SHALL HAVE THE FOLLOWING OPTIMUM RANGES UNLESS OTHERWISE APPROVED BY THE OWNER OR LANDSCAPE ARCHITECT.

ORGANIC CONTENT	3% – 6% FOR LAWN OR GRASS AREAS. 4% – 8% FOR TREE AND SHRUB PLANTERS. 8%–16% FOR RETENTION OR DETENTION BASINS.
(BY LOSS OF IGNITION AT 375 C METHOD OF TESTING)	
PH	6.0 – 7.3

C. NUTRIENT LEVELS SHALL BE ACHIEVED BY THE CONTRACTOR'S ADDITION OF AMENDMENTS TO THE PLANTING SOIL TO MEET THE OPTIMUM NUTRIENT LEVELS SPECIFIED IN THE TESTING LABORATORY REPORT FOR EACH OF PLANTS TO BE INSTALLED.
D. SOIL SHALL BE COMPACTED TO A SURFACE PENETRATION RESISTANCE OF 75–125 LBS/SQ.IN.
E. SOIL MAY BE TREATED FOR WEEDS WITH PRE–EMERGENT OR POST–EMERGENT HERBICIDE, AS NEEDED AND AS APPROPRIATE FOR THE APPLICATION SEASON OR LOCATION, OR ELIMINATE GROWTH OF UNWANTED PLANT MATERIAL. APPLY HERBICIDES IN ACCORDANCE WITH MANUFACTURERS RECOMMENDATIONS. HERBICIDE APPLICATOR MUST BE LICENSED IN THE STATE OF CONNECTICUT, AND PERFORM APPLICATIONS IN ACCORDANCE WITH LOCAL REQUIREMENTS, PERMITTING STIPULATIONS, AND ANY OTHER RESTRICTIONS INCLUDING AND IN EXCESS OF STATE AND FEDERAL REGULATIONS.
F. PROPOSED TOPSOIL SHALL MEET THE USDA SOILS TEXTURAL PERCENTAGES OF SAND, SILT, AND CLAY FOR FOLLOWING CLASSIFICATIONS:
 – LOAM
 – SANDY LOAM WHERE SAND DOES NOT EXCEED 70% AND CLAY IS NOT LESS THAN 5%.
 – SANDY CLAY LOAM WHERE SAND DOES NOT EXCEED 70% AND CLAY IS LESS THAN 28%.
G. BIORETENTION SOILS: SOIL TO BE INSTALLED IN RETENTION BASINS, PONDS, OR OTHER STORMWATER MANAGEMENT ENVIRONS SHALL MEET THE ABOVE DESCRIBED CHARACTERISTICS AND AS FOLLOWS:
 – SOIL SHALL NOT CONTAIN MORE THAN 20% CLAY AND LESS THAN 40% SILT.
 – SOIL SHALL HAVE AN INFILTRATION RATE BETWEEN 1/2" AND 3" PER HOUR.
H. MODIFICATION TO THE PLANTING SOIL CHARACTERISTICS DESCRIBED ABOVE MAY BE SUBMITTED FOR APPROVAL BY THE LANDSCAPE ARCHITECT. CONTRACTOR MUST DEMONSTRATE PROPOSED CHARACTERISTICS ARE EQUAL TO OR SUPERIOR TO THE SPECIFIED CHARACTERISTICS WITH RESPECT TO SUPPORTING PLANT GROWTH, AND STORMWATER MANAGEMENT.

12. PLANTING AMENDMENTS:
APPLY FERTILIZER AND OTHER AMENDMENTS AS RECOMMENDED FOR EACH PLANTING AREA BY SOIL ANALYSIS. APPLY AMENDMENTS IN A MANNER CONSISTENT WITH MANUFACTURER'S RECOMMENDATIONS. ANY ORGANIC AMENDMENTS SHALL HAVE A pH BETWEEN 4.5 AND 5.5 UNLESS OTHERWISE RECOMMENDED.

13. PLANT REQUIREMENTS: ALL PLANTS SHALL CONFORM IN SIZE AND GRADE TO THE AMERICAN STANDARD FOR NURSERY STOCK, ANSI Z60.1 (LATEST EDITION). ALL PLANTS SHALL MEET THE ADDITIONAL REQUIREMENTS SET FORTH BELOW AND IN WRITTEN SPECIFICATIONS AS APPLICABLE. ALL TREES AND SHRUBS SHALL HAVE BEEN GROWN AT A COMMERCIAL NURSERY WITHIN 200 MILES OF THE PROJECT SITE UNLESS OTHERWISE APPROVED BY OWNER OR LANDSCAPE ARCHITECT. THEY SHALL BE TYPICAL OF THEIR SPECIES OR VARIETY. THEY SHALL BE HEALTHY, SYMMETRICAL, EVENLY AND DENSELY BRANCHED, AND DENSELY FOLIATED WHEN IN LEAF. THEY SHALL BE FREE OF BARK INJURY, DISEASE, AND INSECT PESTS. ALL TREES SHALL HAVE A STRAIGHT TRUNK WITH A SINGLE MAIN LEADER UNLESS OTHERWISE CHARACTERISTIC OF THE SPECIES OR VARIETY. THE OWNER OR LANDSCAPE ARCHITECT WILL ALLOW SUBSTITUTIONS ONLY UPON WRITTEN APPROVAL. SIZES SHALL CONFORM TO THE MEASUREMENT SPECIFIED ON THE DRAWINGS. PLANTS LARGER THAN SPECIFIED MAY BE USED IF APPROVED, BUT THE USE OF SUCH PLANTS SHALL NOT INCREASE THE CONTRACT PRICE. ALL OVERSTORY TREES PLANTED ALONG PARKING AREAS, SIDEWALKS AND PEDESTRIAN ACCESSES SHALL NOT BRANCH BELOW 7' FEET IF THE TREE CALIPER IS 3" INCHES OR GREATER. ALL PLANT MATERIALS ARE SUBJECT TO INSPECTION AND ACCEPTANCE BY THE OWNER OR LANDSCAPE ARCHITECT AT THE NURSERY SOURCE. THE CONTRACTOR SHALL COORDINATE SOURCE VISITS WITH THE LANDSCAPE ARCHITECT AND SHALL ACCOMPANY THE OWNER AND/OR LANDSCAPE ARCHITECT FOR ALL INSPECTIONS. CERTIFICATES OF COMPLIANCE WITH SPECIFICATIONS ARE REQUIRED FOR ALL PLANTS.

14. INSPECTION AND REVIEW:
ALL PLANT MATERIAL SHALL BE SUBJECT TO INSPECTION AND ACCEPTANCE BY THE OWNER OR LANDSCAPE ARCHITECT AT THE NURSERY SOURCE OR PLACE OF GROWTH. THE CONTRACTOR SHALL COORDINATE WITH THE LANDSCAPE ARCHITECT ON A SCHEDULE FOR SOURCE VISITS AND ACCOMPANY THE OWNER OR LANDSCAPE ARCHITECT FOR ALL SOURCE INSPECTIONS. CERTIFICATES OF COMPLIANCE ARE REQUIRED FOR ALL PLANT MATERIALS.
PHOTOGRAPHIC REVIEW OF PLANT MATERIAL IS ACCEPTABLE IF APPROVED BY LANDSCAPE ARCHITECT. PHOTOGRAPHS MUST BE PROVIDED IN QUANTITY AND VARIETY TO ALLOW LANDSCAPE ARCHITECT SUFFICIENT INFORMATION TO MAKE A REASONABLE DETERMINATION AS TO THE PLANTS' QUALITY. OWNER AND LANDSCAPE ARCHITECT RESERVES THE RIGHT TO REJECT PLANT MATERIAL DELIVERED TO THE SITE BUT PREVIOUSLY ACCEPTED IF DAMAGED OR NOT PROPERLY MAINTAINED DURING THE DELIVERY PROCESS.

15. PLANTING SEASONS (UNLESS OTHERWISE APPROVED BY THE OWNER OR LANDSCAPE ARCHITECT)

	SPRING	FALL
EVERGREEN TREES AND SHRUBS	APRIL 1 TO JUNE 15	SEPTEMBER 1 TO OCTOBER 15
DECIDUOUS TREES AND SHRUBS	APRIL 1 TO JUNE 15	SEPTEMBER 15 TO NOVEMBER 15
GROUNDCOVERS	APRIL 1 TO JUNE 15	SEPTEMBER 1 TO OCTOBER 15
PERENNIALS	MAY 15 TO JUNE 15	SEPTEMBER 1 TO OCTOBER 15
BULBS	N/A	SEPTEMBER 15 TO NOVEMBER 15
SEED MIXES	PER MANUFACTURERS RECOMMENDATIONS OR AS LISTED IN SEED MIX NOTES	

16. SEEDING MIXTURES: REFER TO SEED MIX NOTES. SEEDED AREA SHALL BE ACCEPTED WHEN SEED AREA ACHIEVES 90% COVERAGE.

17. ALL SLOPES 3:1 OR STEEPER RECEIVING A SEED MIX SHALL BE COVERED WITH AN EROSION CONTROL BLANKET OF STRAW FIBER AND BIODEGRADABLE OR PHOTODEGRADABLE NETTING.

18. UNLESS OTHERWISE NOTED IN DRAWING SET, NEW TREELINES SHALL EQUAL CLEARING AND GRUBBING LIMIT FOR CONSTRUCTION.

19. ALL DISTURBED AREAS NOT OTHERWISE DEVELOPED SHALL BE SEEDED WITH THE LAWN SEED MIX.

20. ALL SHADE TREE, BUFFER YARD AND OTHER LANDSCAPING INCLUDING WALLS AND FENCES REQUIRED BY LOCAL ORDINANCE OR ZONING SHALL BE PERPETUALLY MAINTAINED BY THE PROPERTY OWNER. ANY LANDSCAPING NEEDED TO MEET AN ORDINANCE OR ZONING REQUIREMENT THAT DIES, IS REMOVED, OR IS SEVERELY DAMAGED SHALL BE REPLACED BY THE CURRENT PROPERTY OWNER AS SOON AS IS PRACTICAL CONSIDERING GROWING SEASONS, WITH A MAXIMUM OF 150 DAYS.

Architecture
Engineering
Environmental
Land Surveying
BL Companies
355 Research Parkway
Meriden, CT 06450
(203) 630-1406
(203) 630-2615 Fax

Garden Homes

ROSE EQUITIES
Owner-Builders since 1949

STATE OF CONNECTICUT · CHRISTOPHER D. GAGNON · No. 25798 · LICENSED · PROFESSIONAL ENGINEER

THE RESIDENCES AT MAIN
K & K DEVELOPERS, INC.
5085 MAIN STREET
TRUMBULL, CONNECTICUT

REVISIONS

No.	Date	Desc.
1.	6/30/2020	REVISED PER STAFF COMMENTS
2.	8/10/2020	REVISED PER STAFF COMMENTS

Designed	L.M.W.
Drawn	L.M.W.
Reviewed	J.J.S.
Scale	NONE
Project No.	1800513
Date	05/28/2020
CAD File:	LL180051301

Title
LANDSCAPE NOTES AND DETAILS

Sheet No.
LL-2

Xref (s): : BD180051301 ; XY180051301 ; XC180051301 ; XY05C133801 ; XY180051302 ; XC180051302 ; XC180051303 ; XL180051301 ; XC180051301-COLOR

8/17/2020, JSOJKA, G:\JOBS18\04\1800513\DWG\LL180051301.DWG,LL-2 24X36 NTS.

© 2020 BL COMPANIES, INC. THESE DRAWINGS SHALL NOT BE UTILIZED BY ANY PERSON, FIRM OR CORPORATION WITHOUT THE SPECIFIC WRITTEN PERMISSION OF BL COMPANIES.

GENERAL DISCLAIMER:

Calculations have been performed according to IES standards and good practice Some differences between measured values and calculated results may occur due to tolerances in calculation methods, testing procedures, component performance, measurement techniques and field conditions such as voltage and temperature variations. Input data used to generate the attached calculations such as room dimensions, reflectances, furniture and architectural elements significantly affect the lighting calculations. If the real environment conditions do not match the input data, differences will occur between measured values and calculated values.

* LLF Determined Using Current Published Lamp Data

NOTE TO REVIEWER:

Total Light Loss Factor (LLF) applied at time of design is determined by applying the Lamp Lumen Depreciation (LLD) from current lamp manufacturer's catalog, a Luminaire Dirt Depreciation Factor (LDD) based on IES recommended values and a Ballast Factor (BF) from current ballast specification sheets. Application of an incorrect Light Loss Factor (LLF) will result in forecasts of performance that will not accurately depict actual results.

For proper comparison of photometric layouts, it is essential that you insist all designers use correct Light Loss Factors.

APEX LIGHTING SOLUTIONS

THE POINT WHERE ALL ASCENDING LINES CONVERGE

TELEPHONE 860.632.8766

WWW.APEXLIGHTINGSOLUTIONS.COM

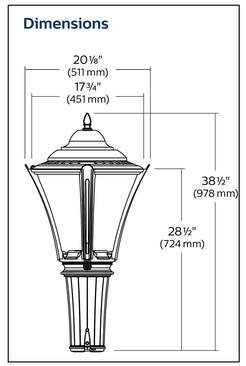

NOTES
1. LUMEC METROSCAPE FIXTURE
2. LED
3. FULL CUT-OFF FIXTURE
4. 14-18 FOOT POLE HEIGHT

TYPICAL LUMINAIRE

N.T.S

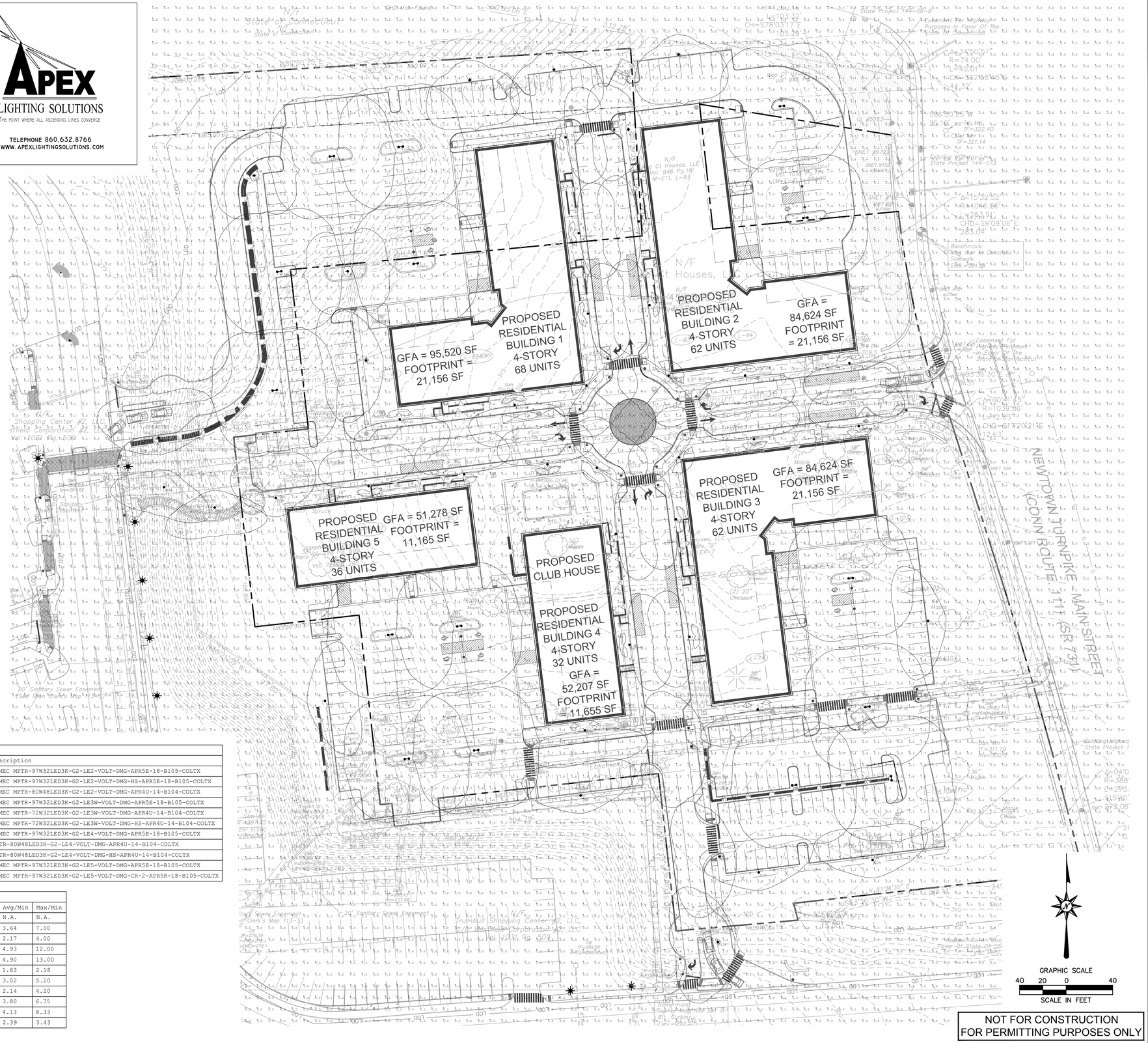

Luminaire Schedule							
Qty	Label	Arrangement	Lumens	Input Watts	LLF	BUG Rating	Description
5	SL2A	SINGLE	7172	104.3	0.850	B1-U0-G1	LUMEC MPTR-97W32LED3K-G2-LE2-VOLT-DMG-APR5E-18-B105-COLTX
2	SL2A-H	SINGLE	5958	104.3	0.850	B1-U0-G1	LUMEC MPTR-97W32LED3K-G2-LE2-VOLT-DMG-HS-APR5E-18-B105-COLTX
2	SL2B	SINGLE	6186	81.3	0.850	B1-U0-G1	LUMEC MPTR-80W48LED3K-G2-LE2-VOLT-DMG-APR4U-14-B104-COLTX
5	SL3A	SINGLE	7353	104.3	0.850	B1-U0-G2	LUMEC MPTR-97W32LED3K-G2-LE3W-VOLT-DMG-APR5E-18-B105-COLTX
1	SL3C	SINGLE	5333	70.3	0.850	B1-U0-G2	LUMEC MPTR-72W32LED3K-G2-LE3W-VOLT-DMG-APR4U-14-B104-COLTX
18	SL3C-H	SINGLE	4510	70.3	0.850	B1-U0-G2	LUMEC MPTR-72W32LED3K-G2-LE3W-VOLT-DMG-HS-APR4U-14-B104-COLTX
3	SL4A	SINGLE	7216	104.3	0.850	B1-U0-G2	LUMEC MPTR-97W32LED3K-G2-LE4-VOLT-DMG-APR5E-18-B105-COLTX
1	SL4B	SINGLE	6224	81.3	0.850	B1-U0-G2	MPTR-80W48LED3K-G2-LE4-VOLT-DMG-APR4U-14-B104-COLTX
4	SL4B-H	SINGLE	5453	81.3	0.850	B1-U0-G2	MPTR-80W48LED3K-G2-LE4-VOLT-DMG-HS-APR4U-14-B104-COLTX
2	SL5A	SINGLE	7751	104.3	0.850	B3-U0-G2	LUMEC MPTR-97W32LED3K-G2-LE5-VOLT-DMG-APR5E-18-B105-COLTX
15	SL5A-2	BACK-BACK	7751	104.3	0.850	B3-U0-G2	LUMEC MPTR-97W32LED3K-G2-LE5-VOLT-DMG-CR-2-APR5R-18-B105-COLTX

Calculation Summary						
Label	Grid Height	Avg	Max	Min	Avg/Min	Max/Min
CalcPts_1	0	0.28	4.2	0.0	N.A.	N.A.
CONNECTOR PATH	0	2.55	4.9	0.7	3.64	7.00
EAST DRIVE LANE		1.52	2.8	0.7	2.17	4.00
LOWER LEFT PARKING LOT		1.48	3.6	0.3	4.93	12.00
LOWER RIGHT PARKING LOT		1.47	3.9	0.3	4.90	13.00
NORTH DRIVE LANE		1.79	2.4	1.1	1.63	2.18
SOUTH DRIVE LANE		1.51	2.6	0.5	3.02	5.20
UPPER LEFT DRIVE LANE		1.07	2.1	0.5	2.14	4.20
UPPER LEFT PARKING LOT		1.52	2.7	0.4	3.80	6.75
UPPER RIGHT PARKING LOT		1.24	2.5	0.3	4.13	8.33
WEST DRIVE LANE		1.67	2.4	0.7	2.39	3.43

© 2020 BL COMPANIES, INC. THESE DRAWINGS SHALL NOT BE UTILIZED BY ANY PERSON, FIRM OR CORPORATION WITHOUT THE SPECIFIC WRITTEN PERMISSION OF BL COMPANIES.

8/17/2020, JOJOKA, G:\JOBS\BF\54\1800513\DWG\LIP1800513\1DWG\LP-1,

Xref (s): , XC1800513001, XY1800513002, SL-1, TRUMBULL LUXURY RESIDENCES - TRUMBULL CT 04-24-2020 LED .1.xcd1800513001

Architecture
Engineering
Environmental
Land Surveying

BL Companies

355 Research Parkway
Meriden, CT 06450
(203) 630-1406
(203) 630-2615 Fax

Garden Homes

ROSE EQUITIES
Owner-Builders since 1949

STATE OF CONNECTICUT CHRISTOPHER D. GOODE No. 27767 LICENSED PROFESSIONAL ENGINEER

THE RESIDENCES AT MAIN
K & K DEVELOPERS, INC.
5085 MAIN STREET
TRUMBULL, CONNECTICUT

REVISIONS

No.	Date	Description
1.	6/19/2020	REVISED PER STAFF COMMENTS
2.	8/10/2020	REVISED PER STAFF COMMENTS

Designed	L.M.W.
Drawn	L.M.W.
Reviewed	J.J.S.
Scale	1"=40'
Project No.	1800513
Date	05/28/2020
CAD File:	LP1800513001

Title

SITE LIGHTING PLAN

Sheet No.

LP-1

SITE WORK GENERAL NOTES

1. THESE PLANS ARE FOR PERMITTING PURPOSES ONLY AND ARE NOT FOR CONSTRUCTION.
2. ALL CONSTRUCTION SHALL COMPLY WITH THE PROJECT SPECIFICATION MANUAL; K&K DEVELOPER STANDARDS, MUNICIPAL STANDARDS AND SPECIFICATIONS, CONNECTICUT DEPARTMENT OF TRANSPORTATION STANDARDS AND SPECIFICATIONS, 2010 ADA STANDARDS, AND STATE BUILDING CODE IN THE ABOVE REFERENCED INCREASING HIERARCHY. IF SPECIFICATIONS ARE IN CONFLICT, THE MORE STRINGENT SPECIFICATION SHALL APPLY. ALL CONSTRUCTION SHALL BE PERFORMED IN ACCORDANCE WITH ALL APPLICABLE OSHA, FEDERAL, STATE AND LOCAL REGULATIONS.
3. REFER TO OTHER PLANS BY OTHER DISCIPLINES, DETAILS AND PROJECT MANUAL FOR ADDITIONAL INFORMATION. THE CONTRACTOR SHALL VERIFY ALL SITE AND BUILDING CONDITIONS IN THE FIELD AND CONTACT THE CIVIL ENGINEER AND ARCHITECT IF THERE ARE ANY QUESTIONS OR CONFLICTS REGARDING THE CONSTRUCTION DOCUMENTS AND/OR FIELD CONDITIONS, SO THAT APPROPRIATE REVISIONS CAN BE MADE PRIOR TO BIDDING. ANY CONFLICT BETWEEN THE DRAWINGS AND SPECIFICATIONS SHALL BE CONFIRMED WITH THE OWNER'S CONSTRUCTION MANAGER PRIOR TO BIDDING.
4. DO NOT INTERRUPT EXISTING UTILITIES SERVICING FACILITIES OCCUPIED AND USED BY THE OWNER OR OTHERS DURING OCCUPIED HOURS EXCEPT WHEN SUCH INTERRUPTIONS HAVE BEEN AUTHORIZED IN WRITING BY THE OWNER AND THE LOCAL MUNICIPALITIES. INTERRUPTIONS SHALL ONLY OCCUR AFTER ACCEPTABLE TEMPORARY SERVICE HAS BEEN PROVIDED.
5. THE CONTRACTOR SHALL ABIDE BY ALL OSHA, FEDERAL, STATE, AND LOCAL REGULATIONS WHEN OPERATING CRANES, BOOMS, HOISTS, ETC. IN CLOSE PROXIMITY TO OVERHEAD ELECTRIC LINES. IF CONTRACTOR MUST OPERATE EQUIPMENT CLOSE TO ELECTRIC LINES, CONTACT POWER COMPANY TO MAKE ARRANGEMENTS FOR PROPER SAFEGUARDS. ANY UTILITY COMPANY FEES SHALL BE PAID FOR BY THE CONTRACTOR.
6. THE CONTRACTOR SHALL PROVIDE AS-BUILT RECORD DRAWINGS OF ALL CONSTRUCTION (INCLUDING UNDERGROUND UTILITIES AND STORMWATER SYSTEM) TO THE OWNER AT THE END OF CONSTRUCTION.
7. THE ARCHITECT OR ENGINEER IS NOT RESPONSIBLE FOR SITE SAFETY MEASURES TO BE EMPLOYED DURING CONSTRUCTION. THE ARCHITECT AND ENGINEER HAVE NO CONTRACTUAL DUTY TO CONTROL THE SAFEST METHODS OR MEANS OF THE WORK, JOB SITE RESPONSIBILITIES, SUPERVISION OR TO SUPERVISE SAFETY AND DOES NOT VOLUNTARILY ASSUME ANY SUCH DUTY OR RESPONSIBILITY.
8. THE CONTRACTOR SHALL COMPLY WITH CFR 29 PART 1926 FOR EXCAVATION, TRENCHING, AND TRENCH PROTECTION REQUIREMENTS.
9. INFORMATION ON EXISTING UTILITIES AND STORM DRAINAGE SYSTEMS HAS BEEN COMPILED FROM AVAILABLE INFORMATION INCLUDING UTILITY COMPANY AND MUNICIPAL OR STATE RECORD MAPS AND/OR FIELD SURVEY AND IS NOT GUARANTEED CORRECT OR COMPLETE. UTILITIES AND STORM DRAINAGE SYSTEMS ARE SHOWN TO ALERT THE CONTRACTOR TO THEIR PRESENCE AND THE CONTRACTOR IS SOLELY RESPONSIBLE FOR DETERMINING ACTUAL LOCATIONS AND ELEVATIONS OF ALL UNDERGROUND AND OVERHEAD UTILITIES AND STORM DRAINAGE SYSTEMS INCLUDING SERVICES. PRIOR TO DEMOLITION OR CONSTRUCTION, THE CONTRACTOR SHALL CONTACT CT CALL BEFORE YOU DIG (CBYD) 72 HOURS BEFORE COMMENCEMENT OF WORK AT CT (800) 922-4455 OR AT 811 AND VERIFY ALL UTILITY AND STORM DRAINAGE SYSTEM LOCATIONS. THE CONTRACTOR SHALL EMPLOY THE USE OF A UTILITY LOCATING COMPANY TO PROVIDE SUBSURFACE UTILITY ENGINEERING CONSISTING OF DESIGNATING UTILITIES AND STORM PIPING ON PRIVATE PROPERTY WITHIN THE CONTRACT LIMIT AND CONSISTING OF DESIGNATING AND LOCATING WHERE PROPOSED UTILITIES AND STORM PIPING CROSS EXISTING UTILITIES AND STORM PIPING WITHIN THE CONTRACT LIMITS.
10. DO NOT SCALE DRAWINGS. DIMENSIONS GOVERN OVER SCALED DIMENSIONS.
11. IF PLANS AND OR SPECIFICATIONS ARE IN CONFLICT, THE MOST COSTLY SHALL APPLY.
12. ALL CONTRACTORS AND SUBCONTRACTORS SHALL OBTAIN COMPLETE DRAWING PLAN SETS FOR BIDDING AND CONSTRUCTION. PLAN SETS OR PLAN SET ELECTRONIC POSTINGS SHALL NOT BE DISASSEMBLED INTO PARTIAL PLAN SETS FOR USE BY CONTRACTORS AND SUBCONTRACTORS OF INDIVIDUAL TRADES. IT SHALL BE THE CONTRACTOR'S AND SUBCONTRACTOR'S RESPONSIBILITY TO OBTAIN COMPLETE PLAN SETS OR COMPLETE PLAN SET ELECTRONIC POSTINGS FOR USE IN BIDDING AND CONSTRUCTION.
13. ALL NOTES AND DIMENSIONS DESIGNATED "TYPICAL" APPLY TO ALL LIKE OR SIMILAR CONDITIONS THROUGHOUT THE PROJECT.
14. CONTRACTOR(S) TO TAKE AND VERIFY ALL DIMENSIONS AND CONDITIONS OF THE WORK AND BE RESPONSIBLE FOR COORDINATION OF SAME. FIELD VERIFY ALL EXISTING CONDITIONS PRIOR TO START OF WORK.
15. BL COMPANIES WILL PREPARE FINAL CONSTRUCTION DOCUMENTS SUITABLE FOR BIDDING AND CONSTRUCTION. PROGRESS SETS OF THESE DOCUMENTS ARE NOT SUITABLE FOR THOSE PURPOSES. IF CLIENT ELECTS TO SOLICIT BIDS OR ENTER INTO CONSTRUCTION CONTRACTS UTILIZING CONSTRUCTION DOCUMENTS THAT ARE NOT YET FINAL, CONSULTANT SHALL NOT BE RESPONSIBLE FOR ANY COSTS OR DELAY ARISING AS A RESULT.
16. NO CONSTRUCTION OR DEMOLITION SHALL BEGIN UNTIL APPROVAL OF THE FINAL PLANS IS GRANTED BY ALL GOVERNING AND REGULATORY AGENCIES.
17. THE OWNER IS RESPONSIBLE FOR OBTAINING ALL NECESSARY ZONING PERMITS REQUIRED BY GOVERNMENT AGENCIES PRIOR TO CONSTRUCTION. THE CONTRACTOR SHALL CONTACT AND OBTAIN FROM MUNICIPAL SOURCES AND STATE SOURCES ALL CONSTRUCTION PERMITS, INCLUDING ANY STATE DOT PERMITS, SEWER AND WATER CONNECTION PERMITS, AND ROADWAY CONSTRUCTION PERMITS. THE CONTRACTOR SHALL POST ALL BONDS, PAY ALL FEES, PROVIDE PROOF OF INSURANCE AND PROVIDE TRAFFIC CONTROL NECESSARY FOR THIS WORK EXCEPT CTDOT ENCROACHMENT PERMIT BOND.
18. THE CONTRACTOR SHALL SUBMIT SHOP DRAWINGS OF ALL PRODUCTS AND MATERIALS PER PLANS AND SPECIFICATIONS TO THE OWNER AND CIVIL ENGINEER FOR REVIEW AND APPROVAL PRIOR TO FABRICATION OR DELIVERY TO THE SITE. ALLOW A MINIMUM OF 14 WORKING DAYS FOR REVIEW.
19. THE CONTRACTOR SHALL FOLLOW THE SEQUENCE OF CONSTRUCTION NOTES PROVIDED ON THE SEDIMENT AND EROSION CONTROL NOTES SHEET.
20. THE CONTRACTOR SHALL REFERENCE ARCHITECTURAL PLANS FOR EXACT DIMENSIONS AND CONSTRUCTION DETAILS OF BUILDING, AND THE RAISED CONCRETE SIDEWALKS, LANDINGS, RAMPS, AND STAIRS.
21. SHOULD ANY UNCHARTED OR INCORRECTLY CHARTED, EXISTING PIPING OR OTHER UTILITY BE UNCOVERED DURING EXCAVATION, CONSULT THE CIVIL ENGINEER IMMEDIATELY FOR DIRECTIONS BEFORE PROCEEDING FURTHER WITH WORK IN THIS AREA.
22. ALL SITE DIMENSIONS ARE REFERENCED TO THE FACE OF CURBS OR EDGE OF PAVING AS APPLICABLE UNLESS OTHERWISE NOTED. ALL BUILDING DIMENSIONS ARE REFERENCED TO THE OUTSIDE FACE OF THE STRUCTURE.
23. THE CONTRACTOR SHALL PROVIDE AND MAINTAIN TRAFFIC DEVICES FOR PROTECTION OF VEHICLES AND PEDESTRIANS CONSISTING OF DRUMS, BARRIERS, SIGNS, LIGHTS, FENCES, TEMPORARY WALKWAYS, TRAFFIC CONTROLLERS AND UNIFORMED TRAFFIC OFFICERS AS REQUIRED OR AS ORDERED BY THE ENGINEER OR AS REQUIRED BY THE LOCAL GOVERNING AUTHORITIES OR AS REQUIRED BY PERMIT STIPULATIONS OR AS REQUIRED BY THE OWNER. CONTRACTOR SHALL MAINTAIN ALL TRAFFIC LANES AND PEDESTRIAN WALKWAYS FOR USE AT ALL TIMES UNLESS WRITTEN APPROVAL FROM THE APPROPRIATE GOVERNING AGENCY IS GRANTED.
24. TRAFFIC CONTROL SIGNAGE SHALL CONFORM TO THE STATE DOT STANDARD DETAIL SHEETS AND THE MANUAL OF UNIFORM TRAFFIC CONTROL DEVICES. SIGNS SHALL BE INSTALLED PLUMB WITH THE EDGE OF THE SIGN 2' OFF THE FACE OF THE CURB, AND WITH 7' VERTICAL CLEARANCE UNLESS OTHERWISE DETAILED OR NOTED.
25. REFER TO DETAIL SHEETS FOR PAVEMENT, CURBING, AND SIDEWALK INFORMATION.
26. THE CONTRACT LIMIT IS THE PROPERTY LINE UNLESS OTHERWISE SPECIFIED OR SHOWN ON THE CONTRACT DRAWINGS.
27. THE CONTRACTOR SHALL SUBMIT A SHOP DRAWING OF THE PAVEMENT MARKING PAINT MIXTURE PRIOR TO STRIPING.
28. PAVEMENT MARKING KEY:

   4" SYDL 4' SOLID YELLOW DOUBLE LINE
   4" SYL 4" SOLID YELLOW LINE
   4" SWL 4" SOLID WHITE LINE
   12" SWSB 12" SOLID WHITE STOP BAR
   4" BWL 4" BROKEN WHITE LINE 10' STRIPE 30' SPACE
29. PARKING SPACES SHALL BE STRIPED WITH 4" SYL; HATCHED AREA SHALL BE STRIPED WITH 4"SYL AT A 45° ANGLE, 2' ON CENTER. HATCHING, SYMBOLS, AND STRIPING FOR HANDICAPPED SPACES SHALL BE PAINTED WHITE AND BLUE. OTHER MARKINGS SHALL BE PAINTED WHITE OR AS NOTED.
30. ALL PARKING SPACES AND HATCHED AREAS SHALL HAVE TWO COATS OF PAVEMENT MARKINGS APPLIED TO STRIPING.
31. PAVEMENT MARKINGS SHALL BE HOT APPLIED TYPE IN ACCORDANCE WITH STATE DOT SPECIFICATIONS, UNLESS WHERE EPOXY RESIN PAVEMENT MARKINGS ARE INDICATED.
32. THE CONTRACTOR SHALL RESTORE ANY UTILITY STRUCTURE, DRAINAGE STRUCTURE, PIPE, UTILITY, PAVEMENT, CURBS, SIDEWALKS, LANDSCAPED AREAS, SWALE, PAVEMENT MARKINGS, OR SIGNAGE DISTURBED DURING DEMOLITION AND/OR CONSTRUCTION TO THEIR ORIGINAL CONDITION OR BETTER, AS APPROVED BY THE CIVIL ENGINEER, AND TO THE SATISFACTION OF THE OWNER AND TOWN OF TRUMBULL.
33. EXISTING BOUNDARY AND TOPOGRAPHY IS BASED ON DRAWING TITLED "BOUNDARY/TOPOGRAPHIC SURVEY, LAND OF WEA CT HOUSES, LLC, NEWTOWN TURNPIKE - MAIN STREET (CONN ROUTE 111), TRUMBULL, CONNECTICUT" SCALE 1"=40', DATED 01/22/2020, BY BL COMPANIES INC.
34. ALTERNATIVE METHODS AND PRODUCTS OTHER THAN THOSE SPECIFIED MAY BE USED IF REVIEWED AND APPROVED BY THE OWNER, CIVIL ENGINEER, AND APPROPRIATE REGULATORY AGENCY PRIOR TO INSTALLATION DURING THE BIDDING PROCESS.
35. CTDOT ENCROACHMENT PERMIT SHALL BE OBTAINED BY CONTRACTOR WHO SHALL PAY ALL FEES, PROVIDE PROOF OF INSURANCE AND PROVIDE TRAFFIC PROTECTION NECESSARY FOR THE WORK. THE OWNER SHALL POST CTDOT ENCROACHMENT PERMIT BOND.
36. AN EROSION CONTROL BOND MAY BE REQUIRED TO BE POSTED BY THE CONTRACTOR BEFORE THE START OF ANY ACTIVITY ON OR OFF SITE. THE AMOUNT OF THE EROSION CONTROL BOND WILL BE DETERMINED BY THE AUTHORITY HAVING JURISDICTION.
37. THE SITE IS CURRENTLY SERVICED BY PUBLIC WATER.
38. NO PART OF THE PROJECT PARCEL IS LOCATED WITHIN ANY FEMA DESIGNATED FLOOD HAZARD AREAS.
39. THERE ARE NO WETLANDS LOCATED ON THE SITE AS INDICATED BY THE NATIONAL WETLANDS INVENTORY ONLINE MAPPING.
40. THERE MAY BE EXISTING STRUCTURES ON SITE TO BE DEMOLISHED. THE CONTRACTOR SHALL SECURE THE NECESSARY PERMITS AND PAY ALL FEES AS APPLICABLE. ALL BUILDING FOOTINGS, FOUNDATION, STRUCTURES, AND BUILDING UTILITY SERVICES SHALL BE REMOVED. CAP UTILITIES AT THE MAIN IN ACCORDANCE WITH UTILITY PROVIDER REQUIREMENTS. COORDINATE WORK WITH UTILITY PROVIDERS. INSTALL TEMPORARY SHEETING AND SHORING TO PROTECT UTILITIES TO REMAIN FROM DAMAGE.
41. 12" SWSB (STOP BAR) AND 4" SYDL AND SWL PAVEMENT MARKINGS LOCATED IN DRIVEWAYS AND IN STATE HIGHWAY SHALL BE EPOXY RESIN TYPE ACCORDING TO CONNDOT SPECIFICATIONS.
42. FIRE LANES SHALL BE ESTABLISHED AND PROPERLY DESIGNATED IN ACCORDANCE WITH THE REQUIREMENTS OF THE FIRE DISTRICT FIRE MARSHAL.
43. THE CONTRACTOR SHALL REMOVE CONFLICTING PAVEMENT MARKINGS IN THE ROADWAY BY METHOD APPROVED BY THE AUTHORITY HAVING JURISDICTION OR DOT AS APPLICABLE FOR THE LOCATION OF THE WORK.
44. ALL ADA DESIGNATED PARKING STALLS, ACCESS AISLES AND PEDESTRIAN WALKWAYS SHALL CONFORM TO THE CURRENT VERSION OF THE AMERICANS WITH DISABILITIES ACT STANDARDS FOR ACCESSIBLE DESIGN AND ANSI STANDARDS AND AS MAY BE SUPERCEDED BY THE STATE BUILDING CODE.
45. CONSTRUCTION OCCURRING ON THIS SITE SHALL COMPLY WITH NFPA 241 STANDARD FOR SAFEGUARDING CONSTRUCTION, ALTERATION AND DEMOLITION OPERATIONS, AND OF NFPA 1 FIRE CODE.
46. CONTRACTOR SHALL SECURE ANY PERMITS, PAY ALL FEES AND PERFORM CLEARING AND GRUBBING AND DEBRIS REMOVAL PRIOR TO COMMENCEMENT OF GRADING OPERATIONS.
47. SEDIMENT AND EROSION CONTROLS AS SHOWN ON THE SEDIMENT AND EROSION CONTROL PLAN AND/OR DEMOLITION PLAN SHALL BE INSTALLED BY THE DEMOLITION CONTRACTOR PRIOR TO START OF DEMOLITION AND CLEARING AND GRUBBING OPERATIONS.
48. REMOVE AND DISPOSE OF ANY SIDEWALKS, FENCES, STAIRS, WALLS, DEBRIS AND RUBBISH REQUIRING REMOVAL FROM THE WORK AREA IN AN APPROVED OFF SITE LANDFILL, BY AN APPROVED HAULER. HAULER SHALL COMPLY WITH ALL REGULATORY REQUIREMENTS.
49. THE CONTRACTOR SHALL SECURE ALL PERMITS FOR THE DEMOLITION AND DISPOSAL OF THE DEMOLITION MATERIAL TO BE REMOVED FROM THE SITE. THE CONTRACTOR SHALL POST BONDS AND PAY PERMIT FEES AS REQUIRED. CONTRACTOR SHALL BE RESPONSIBLE FOR PERMITS AND DISPOSAL OF ALL BUILDING DEMOLITION DEBRIS IN AN APPROVED OFF SITE LANDFILL.
50. ASBESTOS OR HAZARDOUS MATERIAL, IF FOUND ON SITE, SHALL BE REMOVED BY A LICENSED HAZARDOUS MATERIAL ABATEMENT CONTRACTOR.
51. THE CONTRACTOR SHALL PREPARE ALL MANIFEST DOCUMENTS AS REQUIRED PRIOR TO COMMENCEMENT OF DEMOLITION.
52. THE CONTRACTOR SHALL CUT AND PLUG, OR ARRANGE FOR THE APPROPRIATE UTILITY PROVIDER TO CUT AND PLUG ALL SERVICE PIPING AT THE AT THE MAIN, AS REQUIRED BY THE UTILITY PROVIDER, OR AS OTHERWISE NOTED OR SHOWN ON THE CONTRACT DRAWINGS. ALL SERVICES MAY NOT BE SHOWN ON THIS PLAN. THE CONTRACTOR SHALL INVESTIGATE THE SITE PRIOR TO BIDDING TO DETERMINE THE EXTENT OF SERVICE PIPING TO BE REMOVED, CUT OR PLUGGED. THE CONTRACTOR SHALL PAY ALL UTILITY PROVIDER FEES FOR ABANDONMENTS AND REMOVALS.
53. THE CONTRACTOR SHALL PROTECT ALL IRON PINS, MONUMENTS AND PROPERTY CORNERS DURING DEMOLITION AND CONSTRUCTION ACTIVITIES. ANY CONTRACTOR DISTURBED PINS, MONUMENTS, AND OR PROPERTY CORNERS, ETC. SHALL BE RESET BY A LICENSED LAND SURVEYOR AT THE EXPENSE OF THE CONTRACTOR.
54. THE DEMOLITION CONTRACTOR SHALL STABILIZE THE SITE AND KEEP EROSION CONTROL MEASURES IN PLACE UNTIL THE COMPLETION OF HIS WORK OR UNTIL THE COMMENCEMENT OF WORK BY THE SITE CONTRACTOR, WHICHEVER OCCURS FIRST, AS REQUIRED OR DEEMED NECESSARY BY THE ENGINEER OR OWNER'S REPRESENTATIVE. THE SITE CONTRACTOR SHALL ASSUME RESPONSIBILITY FOR THE MAINTENANCE OF EXISTING EROSION AND SEDIMENTATION CONTROLS AND FOR INSTALLATION OF ANY NEW SEDIMENT AND EROSION CONTROLS AS PER THE SEDIMENT AND EROSION CONTROL PLAN, AT THAT TIME.
55. THE CONTRACTOR SHALL PUMP OUT BUILDING FUEL AND WASTE OIL TANKS (IF ANY ARE ENCOUNTERED) AND REMOVE FUEL TO AN APPROVED DISPOSAL AREA BY A LICENSED WASTE OIL HANDLING CONTRACTOR IN STRICT ACCORDANCE WITH STATE REQUIREMENTS.
56. IF IMPACTED OR CONTAMINATED SOIL IS ENCOUNTERED BY THE CONTRACTOR, THE CONTRACTOR SHALL SUSPEND EXCAVATION WORK OF IMPACTED SOIL AND NOTIFY THE OWNER AND/OR OWNER'S ENVIRONMENTAL CONSULTANT PRIOR TO PROCEEDING WITH FURTHER WORK IN THE IMPACTED SOIL LOCATION UNTIL FURTHER INSTRUCTED BY THE OWNER AND/OR OWNER'S ENVIRONMENTAL CONSULTANT.
57. EXISTING WATER SERVICES SHALL BE DISCONNECTED AND CAPPED AT MAIN IN ACCORDANCE WITH THE REQUIREMENTS OF THE WATER UTILITY PROVIDER.
58. EXISTING SANITARY LATERAL SHALL BE PLUGGED WITH NON-SHRINK GROUT AT MAIN CONNECTION IN ACCORDANCE WITH THE SANITARY UTILITY PROVIDER REQUIREMENTS. REMOVE EXISTING LATERAL PIPING FROM SITE UNLESS OTHERWISE SHOWN ON DEMOLITION PLANS OR AS REQUIRED BY THE SANITARY UTILITY PROVIDER.
59. DOMESTIC GAS SERVICES SHALL BE CAPPED AND SERVICE LINES PURGED OF RESIDUAL GAS IN ACCORDANCE WITH THE GAS UTILITY PROVIDER REQUIREMENTS. WORK TO BE COORDINATED BY AND PAID FOR BY THE CONTRACTOR. REMOVE EXISTING SERVICE PIPING ON SITE. ANY PROPANE TANKS SHALL BE PURGED OF RESIDUAL GAS BY PROPANE SUPPLIER. CONTRACTOR SHALL COORDINATE THIS WORK AND PAY NECESSARY FEES.
60. THE CONTRACTOR SHALL PROVIDE DISCONNECT NOTIFICATION TO THE MUNICIPALITY ENGINEERING DEPARTMENT, TELECOMMUNICATIONS UTILITY PROVIDER, GAS UTILITY PROVIDER, ELECTRIC UTILITY PROVIDER, SANITARY UTILITY PROVIDER, AND WATER UTILITY PROVIDER AT LEAST THREE WEEKS PRIOR TO BEGINNING DEMOLITION.
61. THE CONTRACTOR IS RESPONSIBLE FOR SECURING A DEMOLITION PERMIT FROM THE TOWN OF TRUMBULL BUILDING DEPARTMENT AND MUST FURNISH THE REQUIRED APPLICATION MATERIAL AND PAY ALL FEES.
62. BACK FILL DEPRESSIONS, FOUNDATION HOLES AND REMOVED DRIVEWAY AREAS IN LOCATIONS NOT SUBJECT TO FURTHER EXCAVATION WITH SOIL MATERIAL APPROVED BY THE OWNER'S GEOTECHNICAL ENGINEER AND COMPACT, FERTILIZE, SEED AND MULCH DISTURBED AREAS NOT SUBJECT TO FURTHER SITE CONSTRUCTION. DEMOLISHED BUILDING FOUNDATION AREA AND BASEMENT IF PRESENT TO BE BACKFILLED WITH GRAVEL FILL OR MATERIAL SPECIFIED IN THE PROJECT GEOTECHNICAL REPORT IN LIFT THICKNESS SPECIFIED IN THE GEOTECHNICAL REPORT. COMPACT TO 95% MAX. DRY DENSITY PER ASTM D1557 AT MOISTURE CONTENT SPECIFIED IN GEOTECHNICAL REPORT AND EARTHWORK SPECIFICATION. EMPLOY WATERING EQUIPMENT FOR DUST CONTROL.
63. NO DEBRIS AND STUMPS TO BE BURIED ON SITE.
64. THE CONTRACTOR SHALL REPAIR PAVEMENTS BY INSTALLING TEMPORARY AND PERMANENT PAVEMENTS IN PUBLIC RIGHTS OF WAYS (IF APPLICABLE) AS REQUIRED BY LOCAL GOVERNING AUTHORITIES AND THE CT DOT AND PER PERMIT REQUIREMENTS DUE TO DEMOLITION AND PIPE REMOVAL ACTIVITIES.
65. NO WORK ON THIS SITE SHALL BE INITIATED BY THE CONTRACTOR UNTIL A PRE-CONSTRUCTION MEETING WITH OWNER AND THE CIVIL ENGINEER IS PERFORMED. THE CONTRACTOR SHOULD BE AWARE OF ANY SITE INFORMATION AVAILABLE SUCH AS GEOTECHNICAL AND ENVIRONMENTAL REPORTS. THE CONTRACTOR SHALL HAVE CT CALL BEFORE YOU DIG MARK OUTS OF EXISTING UTILITIES COMPLETED PRIOR TO MEETING.
66. THE CONTRACTOR SHALL ARRANGE FOR AND INSTALL TEMPORARY OR PERMANENT UTILITY CONNECTIONS WHERE INDICATED ON PLAN OR AS REQUIRED. MAINTAIN UTILITY SERVICES TO BUILDINGS OR TO SERVICES TO REMAIN. CONTRACTOR TO COORDINATE WITH UTILITY PROVIDERS FOR INSTALLATION AND PAY UTILITY PROVIDER FEES.
67. THE CONTRACTOR SHALL NOT COMMENCE DEMOLITION OR UTILITY DISCONNECTIONS UNTIL AUTHORIZED TO DO SO BY THE OWNER.
68. THE CONTRACTOR OR DEMOLITION CONTRACTOR SHALL INSTALL TEMPORARY SHEETING OR SHORING AS NECESSARY TO PROTECT EXISTING AND NEW BUILDINGS, STRUCTURES AND UTILITIES DURING CONSTRUCTION AND DEMOLITION. SHEETING OR SHORING SHALL BE DESIGNED BY A PROFESSIONAL ENGINEER, LICENSED IN THIS STATE AND EVIDENCE OF SUCH SUBMITTED TO THE OWNER PRIOR TO INSTALLATION.
69. NO SALVAGE SHALL BE PERMITTED UNLESS PAID TO THE OWNER AS A CREDIT.
70. ANY EXISTING POTABLE WELL AND ANY EXISTING SEPTIC TANKS/ABSORPTION AREAS SHALL BE ABANDONED AND REMOVED PER THE TRUMBULL HEALTH DEPARTMENT AND HEALTH CODE REQUIREMENTS.
71. THE CONTRACTOR SHALL PRESERVE EXISTING VEGETATION WHERE POSSIBLE AND/OR AS NOTED ON DRAWINGS. REFER TO SEDIMENT AND EROSION CONTROL PLAN FOR LIMIT OF DISTURBANCE AND EROSION CONTROL NOTES, SHEET.
72. TOPSOIL SHALL BE STRIPPED AND STOCKPILED ON SITE FOR USE IN FINAL LANDSCAPING.
73. FILL WITHIN FORMER BUILDING FOUNDATIONS SHALL BE CHECKED BY TEST PIT AND PROOF-ROLLING AND SHALL BE OBSERVED BY THE OWNER'S GEOTECHNICAL ENGINEER. SUBGRADE SHALL BE FORMED WITH REMOVAL AND REPLACEMENT OF FILL AND REMOVAL AND REPLACEMENT OF UNSUITABLE AND SOFT SUBGRADE MATERIAL AS REQUIRED BY THE GEOTECHNICAL ENGINEER. SEE GEOTECHNICAL REPORT AND EARTHWORK SPECIFICATIONS FOR FURTHER DESCRIPTION.
74. THE CONTRACTOR SHALL COMPACT FILL IN LIFT THICKNESS PER THE GEOTECHNICAL REPORT UNDER ALL PARKING, BUILDING, DRIVE, AND STRUCTURE AREAS TO 95% OF THE MAXIMUM DRY DENSITY AS DETERMINED BY ASTM D1557 (MODIFIED PROCTOR TEST), OR AS REQUIRED BY THE GEOTECHNICAL ENGINEER.
75. UNDERDRAINS SHALL BE ADDED, IF DETERMINED NECESSARY IN THE FIELD BY THE OWNER/GEOTECHNICAL ENGINEER, AFTER SUBGRADE IS ROUGH GRADED.
76. VERTICAL DATUM IS NGVD 29.
77. CLEARING LIMITS SHALL BE PHYSICALLY MARKED IN THE FIELD AND APPROVED BY THE TOWN OF TRUMBULL AGENT PRIOR TO THE START OF WORK ON THE SITE.
78. PROPER CONSTRUCTION PROCEDURES SHALL BE FOLLOWED ON ALL IMPROVEMENTS WITHIN THIS PARCEL SO AS TO PREVENT THE SILTING OF ANY WATERCOURSE OR WETLANDS IN ACCORDANCE WITH THE REGULATIONS OF THE CT DEEP AND THE 2002 CONNECTICUT GUIDELINES FOR SOIL EROSION AND SEDIMENT CONTROL, LATEST EDITION. IN ADDITION, THE CONTRACTOR SHALL STRICTLY ADHERE TO THE SEDIMENT AND EROSION CONTROL PLAN CONTAINED HEREIN. THE CONTRACTOR SHALL BE RESPONSIBLE TO POST ALL BONDS AS REQUIRED BY THE LOCAL MUNICIPALITIES, OR SOIL THE PLANNING AND ZONING COMMISSION WHICH WOULD GUARANTEE THE PROPER IMPLEMENTATION OF THE PLAN.
79. ALL SITE WORK, MATERIALS OF CONSTRUCTION, AND CONSTRUCTION METHODS FOR EARTHWORK AND STORM DRAINAGE WORK SHALL CONFORM TO THE SPECIFICATIONS AND DETAILS AND APPLICABLE SECTIONS OF THE PROJECT SPECIFICATIONS MANUAL. OTHERWISE THIS WORK SHALL CONFORM TO THE CT STATE DEPARTMENT OF TRANSPORTATION SPECIFICATIONS AND PROJECT GEOTECHNICAL REPORT IF THERE IS NO PROJECT SPECIFICATIONS MANUAL. ALL FILL MATERIAL UNDER STRUCTURES AND PAVED AREAS SHALL BE PER THE ABOVE STATED APPLICABLE SPECIFICATIONS, AND/OR PROJECT GEOTECHNICAL REPORT, AND SHALL BE PLACED IN ACCORDANCE WITH THE APPLICABLE SPECIFICATIONS UNDER THE SUPERVISION OF A QUALIFIED PROFESSIONAL ENGINEER. MATERIAL SHALL BE COMPACTED IN LIFT THICKNESSES PER THE PROJECT GEOTECHNICAL REPORT TO 95% OF THE MAXIMUM DRY DENSITY AS DETERMINED BY ASTM D 1557 AT MOISTURE CONTENT INDICATED IN PROJECT GEOTECHNICAL REPORT.
80. ALL DISTURBANCE INCURRED TO MUNICIPAL, AND STATE PROPERTY DUE TO CONSTRUCTION SHALL BE RESTORED TO ITS PREVIOUS CONDITION OR BETTER, TO THE SATISFACTION OF THE MUNICIPALITY AND STATE AS APPLICABLE FOR THE LOCATION OF THE WORK.
81. ALL CONSTRUCTION WITHIN A DOT RIGHT OF WAY SHALL COMPLY WITH ALL DEPARTMENT OF TRANSPORTATION STANDARDS AND SPECIFICATIONS.
82. THE UTILITY PLAN DETAILS SITE INSTALLED PIPES UP TO 5' FROM THE BUILDING FACE. REFER TO ARCHITECTURAL DRAWINGS FOR BUILDING CONNECTIONS. SITE CONTRACTOR SHALL SUPPLY AND INSTALL PIPE ADAPTERS AS NECESSARY AT BUILDING CONNECTION POINT OR AT EXISTING UTILITY OR PIPE CONNECTION POINT.
83. THE CONTRACTOR SHALL VISIT THE SITE AND VERIFY THE ELEVATION AND LOCATION OF ALL UTILITIES BY VARIOUS MEANS PRIOR TO BEGINNING ANY EXCAVATION. TEST PITS SHALL BE DUG AT ALL LOCATIONS WHERE PROPOSED SANITARY SEWERS AND WHERE PROPOSED STORM PIPING WILL CROSS EXISTING UTILITIES, AND THE HORIZONTAL AND VERTICAL LOCATIONS OF THE UTILITIES SHALL BE DETERMINED. THE CONTRACTOR SHALL CONTACT THE CIVIL ENGINEER IN THE EVENT OF ANY DISCOVERED OR UNFORESEEN CONFLICTS BETWEEN EXISTING AND PROPOSED SANITARY SEWERS, STORM PIPING AND UTILITIES SO THAT AN APPROPRIATE MODIFICATION MAY BE MADE.
84. UTILITY CONNECTION DESIGN AS REFLECTED ON THE PLAN MAY CHANGE SUBJECT TO UTILITY PROVIDER AND GOVERNING AUTHORITY STAFF REVIEW.
85. THE CONTRACTOR SHALL ENSURE THAT ALL UTILITY PROVIDERS AND GOVERNING AUTHORITY STANDARDS FOR MATERIALS AND CONSTRUCTION METHODS ARE MET. THE CONTRACTOR SHALL PERFORM PROPER COORDINATION WITH THE RESPECTIVE UTILITY PROVIDER.
86. THE CONTRACTOR SHALL ARRANGE FOR AND COORDINATE WITH THE RESPECTIVE UTILITY PROVIDERS FOR SERVICE INSTALLATIONS AND CONNECTIONS. THE CONTRACTOR SHALL COORDINATE WORK TO BE PERFORMED BY THE VARIOUS UTILITY PROVIDERS AND SHALL PAY ALL FEES FOR CONNECTIONS, DISCONNECTIONS, RELOCATIONS, INSPECTIONS, AND DEMOLITION UNLESS OTHERWISE STATED IN THE PROJECT SPECIFICATIONS MANUAL AND/OR GENERAL CONDITIONS OF THE CONTRACT.
87. ALL EXISTING PAVEMENT WHERE UTILITY PIPING IS TO BE INSTALLED SHALL BE SAW CUT. AFTER UTILITY INSTALLATION IS COMPLETED, THE CONTRACTOR SHALL INSTALL TEMPORARY AND/OR PERMANENT PAVEMENT REPAIR AS DETAILED ON THE DRAWINGS OR AS REQUIRED BY THE OWNER HAVING JURISDICTION.
88. ALL PIPES SHALL BE LAID ON STRAIGHT ALIGNMENTS AND EVEN GRADES USING A PIPE LASER OR OTHER ACCURATE METHOD.
89. SANITARY LATERAL SHALL MAINTAIN (10' MIN. HORIZONTAL 1.5' VERTICAL MIN.) SEPARATION DISTANCE FROM WATER LINES, OR ADDITIONAL PROTECTION MEASURES WILL BE REQUIRED WHERE PERMITTED, WHICH SHALL INCLUDE CONCRETE ENCASEMENT OF PIPING UNLESS OTHERWISE DIRECTED BY THE UTILITY PROVIDERS AND CIVIL ENGINEER.
90. RELOCATION OF UTILITY PROVIDER FACILITIES SHALL BE DONE IN ACCORDANCE WITH THE REQUIREMENTS OF THE UTILITY PROVIDER.
91. THE CONTRACTOR SHALL COMPACT THE PIPE BACKFILL IN 8" LIFTS ACCORDING TO THE PIPE BEDDING DETAILS. TRENCH BOTTOM SHALL BE STABLE IN HIGH GROUNDWATER AREAS. A PIPE FOUNDATION SHALL BE USED PER THE TRENCH DETAILS AND IN AREAS OF ROCK EXCAVATION. STORM DRAINAGE SYSTEM AND UTILITIES ARE TO BE INSTALLED IN 'CUT' CONDITIONS AFTER FINAL SUBGRADE HAS BEEN ESTABLISHED.
92. CONTRACTOR TO PROVIDE STEEL SLEEVES AND ANNULAR SPACE SAND FILL FOR UTILITY PIPE AND CONDUIT CONNECTIONS UNDER FOOTINGS.
93. BUILDING UTILITY PENETRATIONS AND LOCATIONS ARE SHOWN FOR THE CONTRACTOR'S INFORMATION AND SHALL BE VERIFIED WITH THE BUILDING MEP, STRUCTURAL, AND ARCHITECTURAL DRAWINGS AND WITH THE OWNER'S CONSTRUCTION MANAGER.
94. ALL UTILITY CONSTRUCTION IS SUBJECT TO INSPECTION FOR APPROVAL PRIOR TO BACKFILLING, IN ACCORDANCE WITH THE APPROPRIATE UTILITY PROVIDER REQUIREMENTS.
95. A ONE-FOOT MINIMUM VERTICAL CLEARANCE BETWEEN WATER, GAS, ELECTRICAL, AND TELECOMMUNICATION LINES AND STORM PIPING SHALL BE PROVIDED. A SIX-INCH MINIMUM CLEARANCE SHALL BE MAINTAINED BETWEEN STORM PIPING AND SANITARY SEWER WITH A CONCRETE ENCASEMENT. AN 18-INCH TO 6-INCH VERTICAL CLEARANCE BETWEEN SANITARY SEWER PIPING AND STORM PIPING SHALL REQUIRE CONCRETE ENCASEMENT OF THE PROPOSED PIPING.
96. GRAVITY SANITARY SEWER PIPING AND PRESSURIZED WATERLINES SHALL BE LOCATED IN SEPARATE TRENCHES AT LEAST 10 FEET APART WHENEVER POSSIBLE. WHEN INSTALLED IN THE SAME TRENCH, THE WATER PIPE SHALL BE LAID ON A TRENCH BENCH AT LEAST 18 INCHES ABOVE THE TOP OF THE SANITARY SEWER PIPE AND AT LEAST 12 INCHES (PREFERABLY 18 INCHES) FROM THE SIDE OF THE SANITARY SEWER PIPE TRENCH.
97. SITE CONTRACTOR SHALL PROVIDE ALL BENDS, FITTINGS, ADAPTERS, ETC., AS REQUIRED FOR PIPE CONNECTIONS TO BUILDING STUB OUTS, INCLUDING ROOF DRAIN CONNECTIONS TO ROOF LEADERS AND TO STORM DRAINAGE SYSTEM, AND FOOTING DRAIN CONNECTIONS TO STORM DRAINAGE SYSTEM.
98. MANHOLE RIMS AND CATCH BASIN GRATES SHALL BE SET TO ELEVATIONS SHOWN. SET ALL EXISTING MANHOLE RIMS AND VALVE COVERS TO BE RAISED OR LOWERED FLUSH WITH FINAL GRADE AS NECESSARY.
99. SITE CONTRACTOR SHALL COORDINATE INSTALLATION OF CONDUIT AND CABLES FOR SITE LIGHTING WITH THE BUILDING ELECTRICAL CONTRACTOR.
100. CONTRACTOR SHALL COORDINATE INSTALLATION FOR ELECTRICAL SERVICES TO ENTRY SIGN AND SITE LIGHTING WITH THE BUILDING ELECTRICAL CONTRACTOR.
101. THE CONTRACTOR SHALL ARRANGE AND COORDINATE WITH UTILITY PROVIDERS FOR WORK TO BE PERFORMED BY UTILITY PROVIDERS. THE CONTRACTOR SHALL PAY ALL UTILITY FEES UNLESS OTHERWISE STATED IN THE PROJECT SPECIFICATION MANUAL AND GENERAL CONDITIONS, AND REPAIR PAVEMENTS AS NECESSARY.
102. ELECTRIC, AND TELECOMMUNICATIONS SERVICES SHALL BE INSTALLED UNDERGROUND FROM SERVICE POLE SNET#125 AND SNET#122. THE CONTRACTOR SHALL PROVIDE AND INSTALL AND BACKFILL 4-3" PVC CONDUITS FOR TELECOMMUNICATIONS SERVICE, 2-4" PVC CONDUITS FOR ELECTRIC SERVICE PRIMARY, PVC CONDUITS FOR ELECTRICAL SECONDARY PER BUILDING ELECTRICAL PLANS, (SCHEDULE 80 UNDER PAVEMENT, SCHEDULE 40 IN NON PAVEMENT AREAS). SERVICES MAY BE INSTALLED IN A COMMON TRENCH WITH 12" CLEAR SPACE BETWEEN. MINIMUM COVER IS 36" ON ELECTRIC CONDUITS, AND 24" ON TELECOMMUNICATIONS CONDUITS. SERVICES SHALL BE MARKED WITH MAGNETIC LOCATOR TAPE AND SHALL BE BEDDED, INSTALLED, AND BACKFILLED IN ACCORDANCE WITH ELECTRIC UTILITY PROVIDER, AND TELECOMMUNICATIONS COMPANY STANDARDS. GALVANIZED STEEL ELECTRICAL CONDUIT SHALL BE USED AT POLE AND TRANSFORMER LOCATIONS. INSTALL HANDHOLES AS REQUIRED TO FACILITATE INSTALLATION AND AS REQUIRED BY UTILITY PROVIDER. INSTALL TRAFFIC LOAD QUALIFIED HANDHOLES IN VEHICULAR AREAS. INSTALL CONCRETE ENCASEMENT ON PRIMARY ELECTRIC CONDUITS IF REQUIRED BY ELECTRIC UTILITY PROVIDER.
103. ALL WATER LINES TO HAVE A MINIMUM COVER OF 4 FEET. ALL LINES SHALL BE BEDDED IN 6" SAND AND INITIALLY BACKFILLED WITH 12" SAND.
104. ALL WATER MAINS, WATER SERVICES AND SANITARY SEWER LATERALS SHALL CONFORM TO THE APPLICABLE WATER UTILITY PROVIDER SPECIFICATIONS, AND TO THE APPLICABLE SANITARY SEWER PROVIDER SPECIFICATIONS, AS WELL AS TO OTHER APPLICABLE INDUSTRY CODES (AWWA) AND PROJECT SPECIFICATIONS FOR POTABLE WATER SYSTEMS, AND FOR SANITARY SEWER SYSTEMS.
105. THE CONTRACTOR SHALL MAINTAIN ALL FLOWS AND UTILITY CONNECTIONS TO EXISTING BUILDINGS WITHOUT INTERRUPTION UNLESS/UNTIL AUTHORIZED TO DISCONNECT BY THE OWNERS, THE CIVIL ENGINEER, UTILITY PROVIDERS AND GOVERNING AUTHORITIES.
106. THE CONTRACTOR MAY SUBSTITUTE MASONRY STRUCTURES FOR PRECAST STRUCTURES IF APPROVED BY THE CIVIL ENGINEER AND ALLOWED BY THE GOVERNING AUTHORITY ENGINEER OR OTHER GOVERNING AUTHORITY.
107. PIPING SHALL BE LAID FROM DOWNGRADIENT END OF PIPE RUN IN AN UPGRADIENT DIRECTION WITH BELL END FACING UPGRADE IN THE DIRECTION OF PIPE LAYING.
108. POLYVINYL CHLORIDE PIPE (PVCP) FOR STORM PIPING SHALL HAVE BUILT-IN RUBBER GASKET JOINTS. PVCP SHALL CONFORM TO ASTM D-3034 (SDR35) WITH COMPRESSION JOINTS AND MOLDED FITTINGS. PVCP SHALL BE INSTALLED IN ACCORDANCE WITH THE DETAILS; ASTM-D2321 AND MANUFACTURERS RECOMMENDED PROCEDURE.
109. ALL RCP SHALL CONFORM TO THE REQUIREMENTS OF ASTM C-76; ALL RCP SHALL BE CLASS IV UNLESS OTHERWISE SHOWN. JOINTS SHALL CONFORM TO THE REQUIREMENTS OF ASTM C-443.
110. MANHOLE SECTIONS AND CONSTRUCTION SHALL CONFORM TO ASTM C-478.
111. HIGH DENSITY POLYETHYLENE (HDPE) STORM SEWER 12" OR GREATER IN DIAMETER SHALL BE N 12 WT PIPE AS MANUFACTURED BY ADS OR APPROVED EQUAL. HDPE PIPE SHALL HAVE SMOOTH INTERIOR AND CORRUGATED EXTERIOR AND SHALL MEET THE REQUIREMENTS OF AASHTO M294, TYPE S. PIPE SECTIONS SHALL BE JOINED WITH BELL-AND-SPIGOT JOINT MEETING THE REQUIREMENTS OF AASHTO M294. THE BELL SHALL BE AN INTEGRAL PART OF THE PIPE AND PROVIDE A MINIMUM PULL-APART STRENGTH OF 400 POUNDS. THE JOINT SHALL BE WATERTIGHT ACCORDING TO THE REQUIREMENTS OF ASTM D3212. GASKETS SHALL BE MADE OF POLYISOPRENE MEETING THE REQUIREMENTS OF ASTM F477. ALTERNATIVE HDPE PIPE MAY BE USED IF APPROVED BY THE ENGINEER AND OWNER'S CONSTRUCTION MANAGER PRIOR TO ORDERING.
112. HIGH DENSITY POLYETHYLENE (HDPE) STORM SEWER LESS THAN 12" IN DIAMETER SHALL BE N12 AS MANUFACTURED BY ADS OR APPROVED EQUAL. HDPE PIPE SHALL HAVE SMOOTH INTERIOR AND CORRUGATED EXTERIOR AND SHALL MEET THE REQUIREMENTS OF AASHTO 252, TYPE S. PIPE SECTIONS SHALL BE JOINED WITH COUPLING BANDS OR EXTERNAL SNAP COUPLERS COVERING AT LEAST 2 FULL CORRUGATIONS ON EACH END OF THE PIPE. SOIL-TIGHT (GASKET) CONNECTIONS SHALL INCORPORATE A CLOSED SYNTHETIC EXPANDED RUBBER GASKET. MEETING THE REQUIREMENTS OF ASTM F477. GASKETS SHALL BE INSTALLED ON THE CONNECTION BY THE PIPE MANUFACTURER. WATERTIGHT PIPE SHALL BE ADS N12 WT OR APPROVED EQUAL. ALTERNATIVE HDPE PIPE MAY BE USED IF APPROVED BY THE ENGINEER AND OWNER'S CONSTRUCTION MANAGER PRIOR TO ORDERING.
113. COPPER PIPE SHALL BE TYPE K TUBING WITH COMPRESSION FITTINGS.
114. GAS PIPE MATERIAL SHALL BE PER GAS COMPANY REQUIREMENTS.
115. POLYVINYL CHLORIDE PIPE (PVCP) FOR SANITARY PIPING SHALL HAVE BUILT-IN RUBBER GASKET JOINTS. PVCP SHALL CONFORM TO ASTM D3034 (SDR35) WITH COMPRESSION JOINTS AND MOLDED FITTINGS. PVCP SHALL BE INSTALLED IN ACCORDANCE WITH THE DETAILS, ASTM D2321 AND MANUFACTURER'S RECOMMENDED PROCEDURE.
116. DUCTILE IRON PIPE SHALL CONFORM TO AWWA C151 FOR CLASS 52 WITH CEMENT LINING IN ACCORDANCE WITH ANSI A21.4 FOR WATER MAINS AND SERVICES 3" ID AND LARGER. JOINTS SHALL BE MADE WITH CONCRETE THRUST BLOCKS OR WITH MEGAULUG RETAINER GLANDS OR WITH RODDING IN ACCORDANCE WITH PROJECT MANUAL SPECIFICATIONS AND IN ACCORDANCE WITH WATER UTILITY PROVIDER REQUIREMENTS TO EXTEND A MINIMUM OF 2 PIPE LENGTHS IN EITHER DIRECTION FROM FITTINGS AND ELBOWS (40 FT MINIMUM). ALL OTHER JOINTS SHALL BE PUSH-ON WITH RUBBER GASKETS (TYTON). USE OF OTHER TYPES OF RETAINER GLANDS SHALL REQUIRE USE WITH CLASS 53 OR GREATER DUCTILE IRON PIPE.
117. REFER TO STORM WATER MANAGEMENT REPORT FOR OPERATIONS AND MAINTENANCE SCHEDULE FOR SYSTEM COMPONENTS.

DEFINITIONS

MUNICIPALITY SHALL MEAN TOWN OF TRUMBULL

COUNTY SHALL MEAN FAIRFIELD COUNTY

STATE SHALL MEAN STATE OF CONNECTICUT

WATER UTILITY PROVIDER SHALL MEAN AQUARION WATER COMPANY

SANITARY UTILITY PROVIDER SHALL MEAN THE TOWN OF TRUMBULL WATER POLLUTION CONTROL AUTHORITY

GAS UTILITY PROVIDER SHALL MEAN SOUTHERN CONNECTICUT GAS

TELECOMMUNICATIONS UTILITY PROVIDER SHALL MEAN CHARTER

ELECTRIC UTILITY PROVIDER SHALL MEAN UNITED ILLUMINATING COMPANY

NOT FOR CONSTRUCTION
FOR PERMITTING PURPOSES ONLY

Architecture
Engineering
Environmental
Land Surveying

BL Companies

355 Research Parkway
Meriden, CT 06450
(203) 630-1406
(203) 630-2615 Fax

Garden Homes

ROSE EQUITIES
Owner-Builders since 1949

THE RESIDENCES AT MAIN
K & K DEVELOPERS, INC.
5085 MAIN STREET
TRUMBULL, CONNECTICUT

REVISIONS

No.	Date	Desc.
1.	6/30/2020	REVISED PER STAFF COMMENTS
2.	8/10/2020	REVISED PER STAFF COMMENTS

Designed	A.T.K.
Drawn	A.T.K.
Reviewed	J.J.S.
Scale	NONE
Project No.	1800513
Date	05/28/2020
CAD File: GN180051301	

Title
GENERAL NOTES

Sheet No.
GN-1

Xref (s): : BD180051301

8/17/2020, JSOJKA, G:\JOBS18\04\1800513\DWG\GN180051301.DWG,GN-1 24X36.

© 2020 BL COMPANIES, INC. THESE DRAWINGS SHALL NOT BE UTILIZED BY ANY PERSON, FIRM OR CORPORATION WITHOUT THE SPECIFIC WRITTEN PERMISSION OF BL COMPANIES.

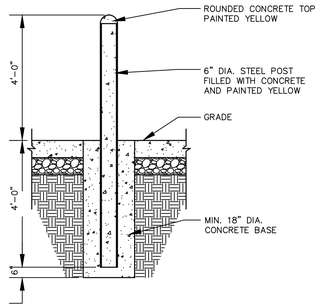

PROTECTIVE POST (BOLLARD) DETAIL

N.T.S. BLSE-005

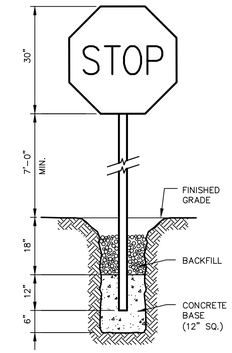

NOTE:
CONSTRUCT SIGN IN ACCORDANCE WITH DOT SPECIFICATIONS.

TYPICAL SIGN MOUNTING

N.T.S.

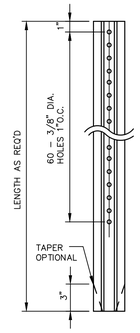

DETAIL A HOLE LOCATION

WT.	A	B	C
3 LB. OR 3 LB.	1-5/8"	1-3/4"	3-1/2"
4 LB.	1-5/8"	1-3/4"	3-1/2"

DETAIL A TYPICAL METAL SIGN

DETAIL B TYPICAL METAL SIGN

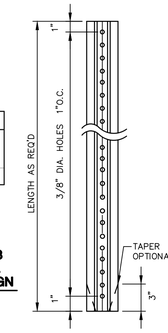

DETAIL B HOLE LOCATION

NOTES:
STEEL FOR POSTS SHALL CONFORM TO THE MECHANICAL REQUIREMENTS OF ASTM A 499-81 GRADE 60 AND TO THE CHEMICAL REQUIREMENTS OF ASTM AI-76 CARBON STEEL TEE RAIL HAVING NOMINAL WEIGHT OF "9# LBS OR GREATER PER LINEAR YARD.

AFTER FABRICATION ALL STEEL POSTS SHALL BE GALVANIZED TO MEET THE REQUIREMENTS OF ASTM A-123.

SIGN MOUNTING HEIGHT TO BE APPROVED BY THE ENGINEER.

TYPICAL METAL SIGN POSTS

N.T.S. BLSD-001

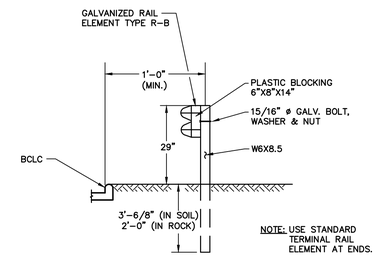

NOTE: USE STANDARD TERMINAL RAIL ELEMENT AT ENDS.

RB-350 METAL BEAM RAIL

N.T.S. ZGR-004

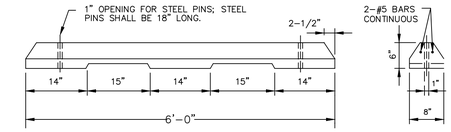

CONCRETE CURB STOP

N.T.S. BLPC-001

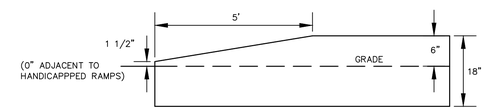

TRANSITION CURB

N.T.S.

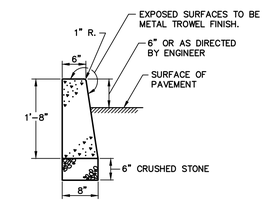

CONCRETE CURB DETAIL

N.T.S. ZPC-014

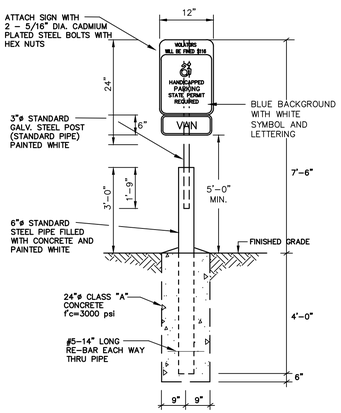

HANDICAP SIGN BOLLARD DETAIL

N.T.S.

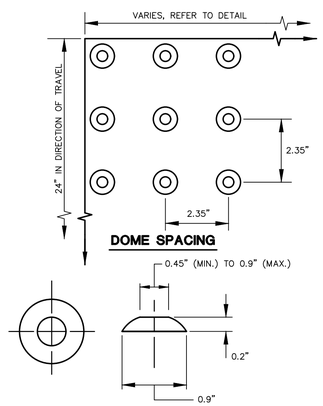

DOME SPACING

DOME SECTION

DETECTABLE WARNING

N.T.S.

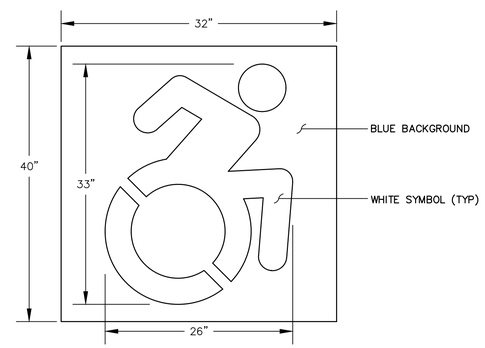

NOTE: HANDICAP SYMBOL TO ADHERE TO STATE BUILDING CODE, LATEST EDITION

CONNECTICUT SYMBOL OF ACCESSIBILITY

N.T.S.

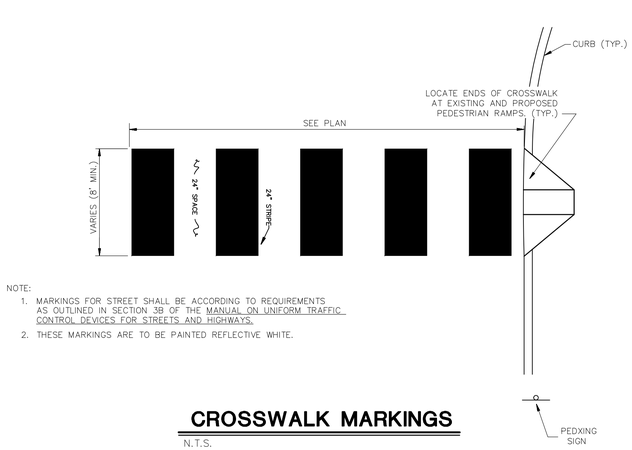

NOTE:
1. MARKINGS FOR STREET SHALL BE ACCORDING TO REQUIREMENTS AS OUTLINED IN SECTION 3B OF THE MANUAL ON UNIFORM TRAFFIC CONTROL DEVICES FOR STREETS AND HIGHWAYS.
2. THESE MARKINGS ARE TO BE PAINTED REFLECTIVE WHITE.

CROSSWALK MARKINGS

N.T.S.

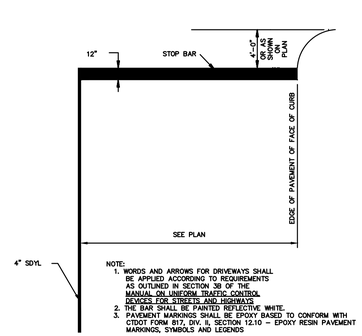

NOTE:
1. WORDS AND ARROWS FOR DRIVEWAYS SHALL BE APPLIED ACCORDING TO REQUIREMENTS AS OUTLINED IN SECTION 3B OF THE MANUAL ON UNIFORM TRAFFIC CONTROL DEVICES FOR STREETS AND HIGHWAYS
2. THE BAR SHALL BE PAINTED REFLECTIVE WHITE.
3. PAVEMENT MARKINGS SHALL BE EPOXY BASED TO CONFORM WITH CTDOT FORM 817, DIV. II, SECTION 12.10 – EPOXY RESIN PAVEMENT MARKINGS, SYMBOLS AND LEGENDS

STOP BAR PAVEMENT MARKING

N.T.S.

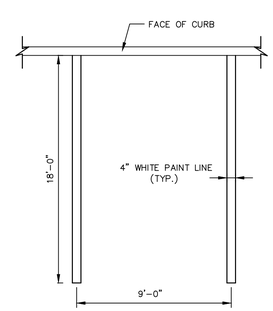

NOTE:
1. PROVIDE 2 COATS OF PAINT ON ALL SURFACES.
2. SEE PLAN FOR ACTUAL SPACE LOCATION AND DIMENSIONS.

TYPICAL PARKING SPACE DETAIL

N.T.S. BLPC-003

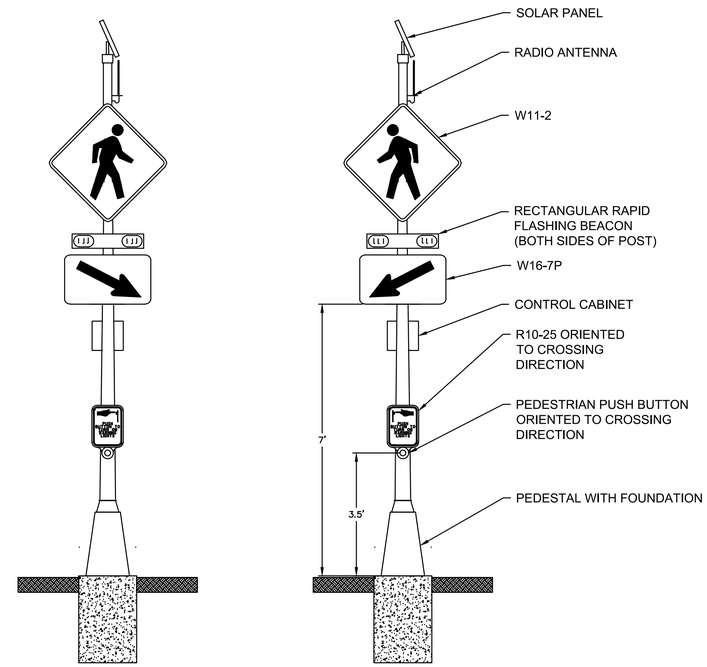

RECTANGULAR RAPID FLASHING BEACON

N.T.S.

NOT FOR CONSTRUCTION
FOR PERMITTING PURPOSES ONLY

8/17/2020, JSO,NA, G:\CIVIL\18\DATA\180513\DWG\DN\180513DT.DWG,DN-1,24X36,

© 2020 BL COMPANIES, INC. THESE DRAWINGS SHALL NOT BE UTILIZED BY ANY PERSON, FIRM OR CORPORATION WITHOUT THE SPECIFIC WRITTEN PERMISSION OF BL COMPANIES.

BL Companies
Architecture
Engineering
Environmental
Land Surveying
355 Research Parkway
Meriden, CT 06450
(203) 630-1406
(203) 630-2615 Fax

Garden Homes

ROSE EQUITIES
Owner-Builders since 1949

STATE OF CONNECTICUT
CHRISTOPHER R. GAUDET
No. 27798
LICENSED
PROFESSIONAL ENGINEER

THE RESIDENCES AT MAIN
K & K DEVELOPERS, INC.
5085 MAIN STREET
TRUMBULL, CONNECTICUT

REVISIONS

No.	Date	Desc.
1.	6/30/2020	REVISED PER STAFF COMMENTS
2.	8/10/2020	REVISED PER STAFF COMMENTS

Designed	A.T.K.
Drawn	A.T.K.
Reviewed	J.J.S.
Scale	NONE
Project No.	180513
Date	05/28/2020
CAD File: DN180051301	

Title
DETAILS SHEET

Sheet No.
DN-1

Xref (s) : BD180051301

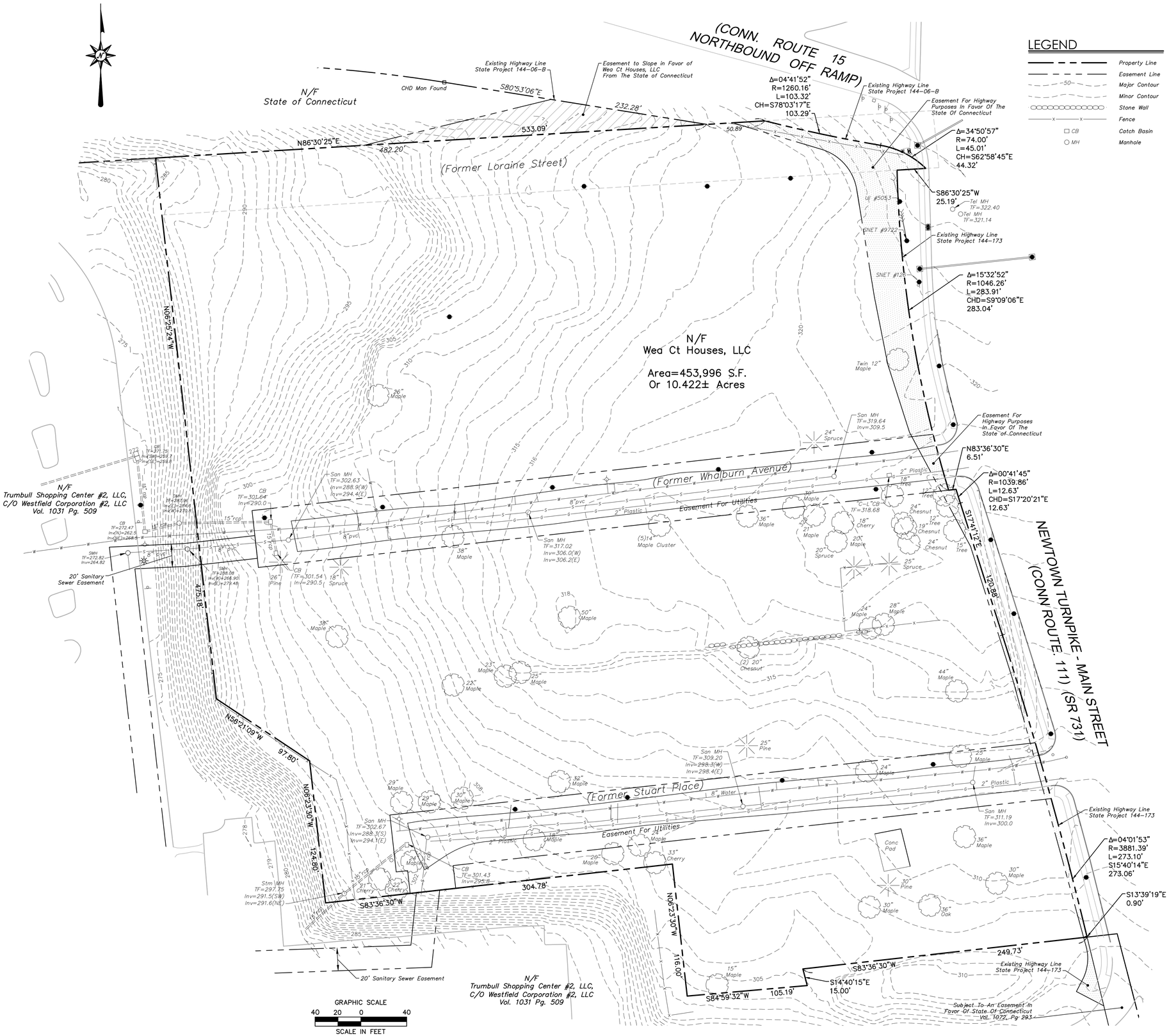

LEGEND

- Property Line
- Easement Line
- Major Contour
- Minor Contour
- Stone Wall
- Fence
- CB — Catch Basin
- MH — Manhole

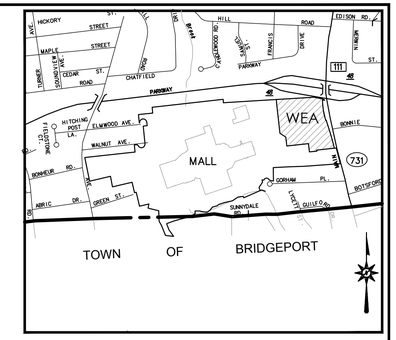

LOCATION MAP

NOT TO SCALE

GENERAL NOTES

1. A) THIS MAP HAS BEEN PREPARED IN ACCORDANCE WITH THE REGULATIONS OF CONNECTICUT STATE AGENCIES, SECTIONS 20–300b–1 THROUGH 20–300b–20 AND THE "STANDARDS AND SUGGESTED METHODS AND PROCEDURES FOR SURVEYS AND MAPS IN THE STATE OF CONNECTICUT" PREPARED AND ADOPTED BY THE CONNECTICUT ASSOCIATION OF LAND SURVEYORS, INC. AUGUST 29, 2019.

   B) THIS PLAN CONFORMS TO HORIZONTAL ACCURACY CLASS A–2 AND TOPOGRAPHIC ACCURACY CLASS T–2 AND T–3 (AERIAL TOPOGRAPHY).

   C) BOUNDARY DETERMINATION IS BASED UPON A RESURVEY.

   D) THE TYPE OF SURVEY PERFORMED IS A PROPERTY/TOPOGRAPHIC SURVEY AND IS INTENDED TO DEPICT THE POSITION OF THE BOUNDARIES WITH RESPECT TO MONUMENTATION FOUND, STRUCTURES, EASEMENTS, ENCROACHMENTS, VISIBLE UTILITIES, ROADWAYS AND CONTOURS.

2. NORTH ARROW AND BEARINGS REFER TO NAD 83 UTILIZING STATION 607X (USC&GS AND STATE SURVEY BRONZE DISK) WITH THE PUBLISHED COORDINATE VALUES OF: N:646207.592; E:870559.821, AND PUBLISHED BASELINE CONTROL POINTS BC–1, BC–2 & BC–3 OF THE ROUTE 111/15 INTERCHANGE PROJECT #144–173, DATED 2000..

3. ELEVATIONS REFER TO THE NORTH AMERICAN DATUM OF 1929 (NGVD 29).

4. PARCEL IS LOCATED IN A FLOOD AREA "X", (AREAS DETERMINED TO BE OUTSIDE THE 0.2% CHANCE FLOODPLAIN) AS DEPICTED ON F.I.R.M. COMMUNITY PANEL NO. 09001C0426F PANEL 426 OF 626 EFFECTIVE DATE JUNE 18, 2010.

5. THE UNDERGROUND UTILITIES DEPICTED HAVE BEEN PLOTTED FROM FIELD SURVEY INFORMATION AND EXISTING DRAWINGS. THE SURVEYOR MAKES NO GUARANTEES THAT THE UNDERGROUND UTILITIES DEPICTED COMPRISE ALL SUCH UTILITIES IN THE AREA, EITHER IN SERVICE OR ABANDONED. THE SURVEYOR FURTHER DOES NOT WARRANT THAT THE UNDERGROUND UTILITIES DEPICTED ARE IN THE EXACT LOCATION INDICATED THOUGH THEY ARE PLOTTED AS ACCURATELY AS POSSIBLE FROM INFORMATION AVAILABLE. THE SURVEYOR HAS NOT PHYSICALLY EXPOSED THE UNDERGROUND UTILITIES. PER CONNECTICUT STATE LAW THE CONTRACTOR SHALL CONFIRM THE LOCATION OF ALL UTILITIES PRIOR TO THE COMMENCEMENT OF EXCAVATION. CALL BEFORE YOU DIG 1–800–922–4455.

6. THE TOWN OF TRUMBULL HAS ABANDONED ITS INTEREST IN AND DISCONTINUED ITS PUBLIC USE OF PORTIONS OF STUART PLACE AND LORRAINE STREET. SEE TRUMBULL TOWN COUNCIL RESOLUTION TC25–197, EFFECTIVE 10/7/2015, REFERENCE #4549.

7. THE TOWN OF TRUMBULL HAS ABANDONED ITS INTEREST IN AND DISCONTINUED ITS PUBLIC USE OF WHALBURN AVENUE. SEE VOLUME 1723 AT PAGE 424.

8. THE TOWN OF TRUMBULL HAS ABANDONED ITS INTEREST IN AND DISCONTINUED ITS PUBLIC USE OF STUART PLACE. SEE VOLUME 1701 AT PAGE 675.

MAP REFERENCES

A. "LOT CONSOLIDATION PLAN, LAND OF WEA CT HOUSES, LLC, NEWTOWN TURNPIKE – MAIN STREET (CONN ROUTE 111) TRUMBULL, CONNECTICUT" SCALE 1"=50', DATE 09/11/2019, SHEET NO. BS–1 PREPARED BY BL COMPANIES, MERIDEN, CONNECTICUT.

B. "BOUNDARY SURVEY MAP, LAND OF TRUMBULL SHOPPING CENTER #2, LLC, 5065 MAIN STREET (SR 731), TRUMBULL, CONNECTICUT" SCALE 1"=100', DATE 08/21/2019, SHEET NO. BS–2 PREPARED BY BL COMPANIES, MERIDEN, CONNECTICUT.

TO MY KNOWLEDGE AND BELIEF THIS MAP IS SUBSTANTIALLY CORRECT AS NOTED HEREON.

PATRICK J. CORLESS, JR. L.S. #70015

NO CERTIFICATION IS EXPRESSED OR IMPLIED UNLESS THIS MAP BEARS THE ORIGINAL SIGNATURE AND EMBOSSED SEAL OF THE ABOVE NAMED LAND SURVEYOR.

Architecture Engineering Environmental Land Surveying
BL Companies
355 Research Parkway
Meriden, CT 06450
(203) 630-1406
(203) 630-2615 Fax

LAND OF
WEA CT HOUSES, LLC
NEWTOWN TURNPIKE - MAIN STREET
(CONN ROUTE 111)
TRUMBULL, CONNECTICUT

REVISIONS

No.	Date	Desc.

Surveyed	J.C./K.J.
Drawn	JS.
Reviewed	PJC
Scale	1"=40'
Project No.	1800513
Date	01/22/2020
Field Book	536
CAD File:	EX180051301

Title
BOUNDARY/ TOPOGRAPHIC SURVEY

Sheet No.
EX-1

Aug 17, 2020 12:49pm jsalpa G:\JOBS18\DATA\180513\DWG\EX180051301.dwg
Layout: EX-1 24X36 40sc

© 2020 BL COMPANIES, INC. THESE DRAWINGS SHALL NOT BE UTILIZED BY ANY PERSON, FIRM OR CORPORATION WITHOUT THE SPECIFIC WRITTEN PERMISSION OF BL COMPANIES.

Xref (s): _XY180051302

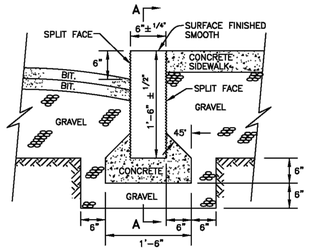

GRANITE STONE CURB

SCALE: 3/4" = 1'-0"

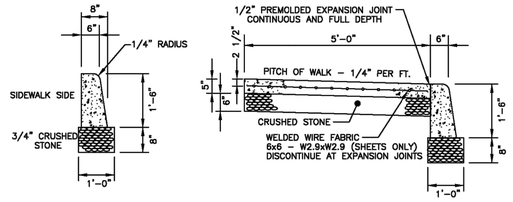

NOTE: A 1/8" STEEL DIVISION PLATE SHALL BE PLACED AT EVERY 10 FEET OF CURBING & REMOVED AFTER CONCRETE HAS SET. A 1/2" APPROVED BITUMINOUS JOINT SHALL BE PLACED AT A MAX. OF EVERY 20 FEET COINCIDING WITH EXPANSION JOINT IN SIDEWALK

CONTRACTOR TO CONSTRUCT 2" BATTER ON CONCRETE CURBING (STREET SIDE ONLY)

STANDARD CURB & SIDEWALK

SCALE: 1/2" = 1'-0"

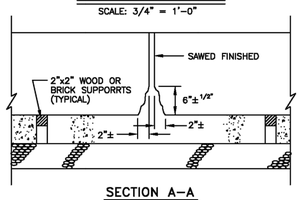

SECTION A–A

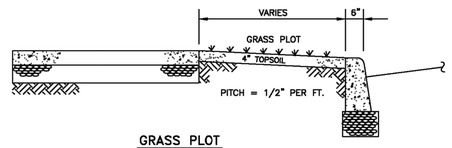

GRASS PLOT

NOTES:
1. ALL REINFORCING SHALL BE SUPPORTED ON CHAIRS OR OTHER POSITIVE TYPE SUPPORTS APPROXIMATELY ONE PER 25 SQ.FT.
2. CONCRETE SHALL BE CLASS "C" CEMENT TYPE II, 3000 PSI
3. AIR ENTRAINMENT SHALL BE BETWEEN 6 – 7%.

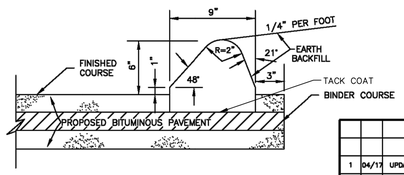

BITUMINOUS CONCRETE LIP CURBING

MACHINED FORMED

NO.	DATE	DESCIPTION	CK.
1	04/17	UPDATED DETAILS	FS

REVISIONS

TOWN OF TRUMBULL
ENGINEERING DEPARTMENT
SKETCHES & CALCULATIONS

Project No. & Name STANDARDS
Subject SIDEWALKS & CURBING
Made by FMS Date 8/13/14
Chk. by FMS Date 8/13/14
SW–1 Sheet No. 1 of 2

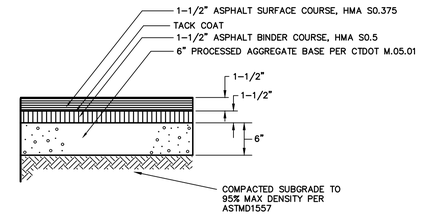

STANDARD DUTY BITUMINOUS CONCRETE PAVEMENT STRUCTURE

N.T.S. ZPC–029

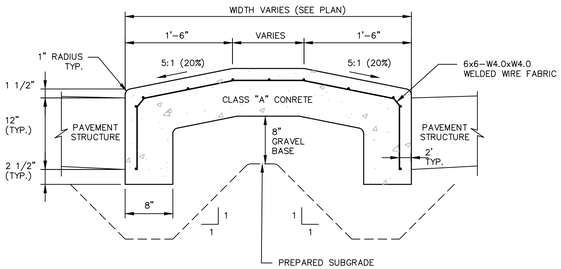

NOTES:
1. MAINTAIN 1'–6" WIDE SLOPED CONCRETE ALL AROUND ISLAND INCLUDING AT ISLAND NOSES (ENDS).

2. INSTALL PREFORMED EXPANSION JOINT FILLER MATERIAL TRANSVERSE TO ISLAND AT 30' O.C.

MOUNTABLE CONCRETE ISLAND

N.T.S. CTPC–013

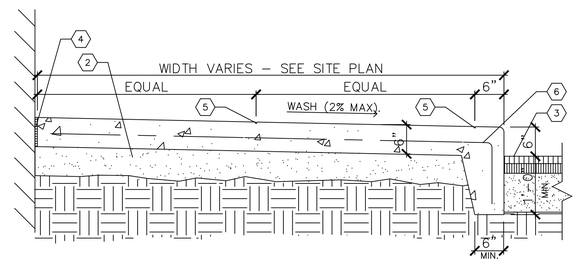

KEYED NOTES

1. N/A
2. 4" COMPACTED GRAVEL BASE
3. PAVEMENT.
4. COMPRESSIBLE FILLER (3/4" MAXIMUM). CUT BACK AND PROVIDE SEALANT, TYPICAL, AT ALL JOINTS WITH FILLER.
5. 1/4" TOOLED JOINT
6. 6" X 6" W 2.1X2.1

NOTE: EXPANSION JOINT 20' O.C. MAXIMUM. 1/4" TOOL JOINT 4' O.C. OR AS DIRECTED. CONCRETE TO BE 4000 P.S.I.

MONOLITHIC CONCRETE CURB AND SIDEWALK DETAIL (ONSITE)

N.T.S. WAG

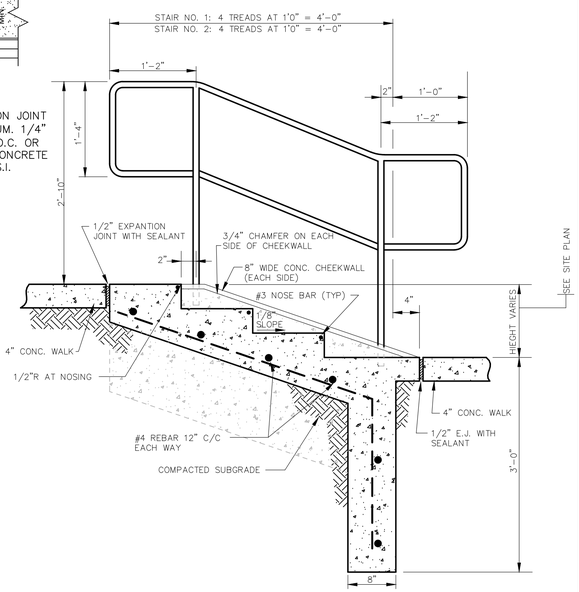

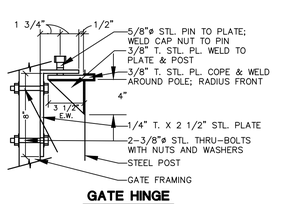

GATE HINGE

TRASH ENCLOSURE GATE (HALF SECTION)

N.T.S. BLSE–001

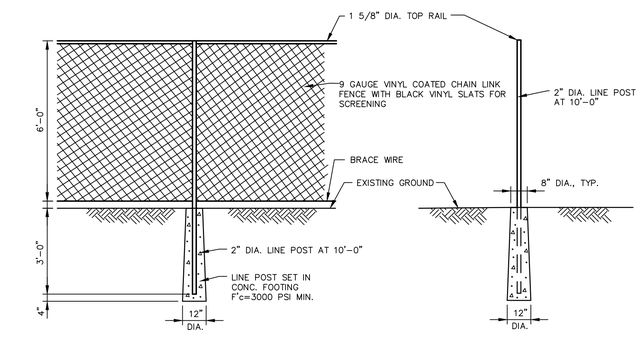

FRONT VIEW SIDE VIEW

CHAIN LINK FENCE DETAIL

N.T.S. BLFD–001

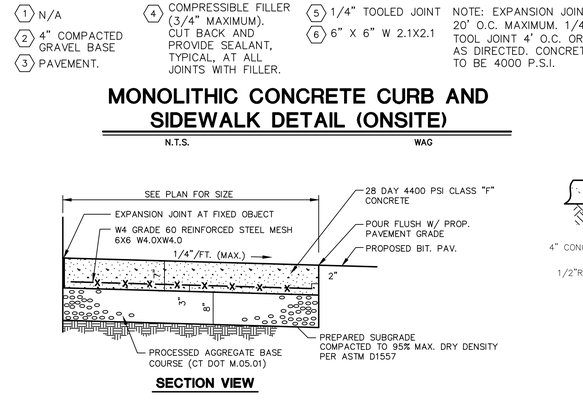

SECTION VIEW

CONCRETE PAD

N.T.S. BLPC–002

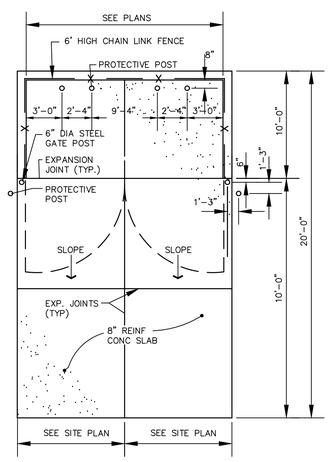

TRASH ENCLOSURE PLAN

N.T.S. BLSE–004

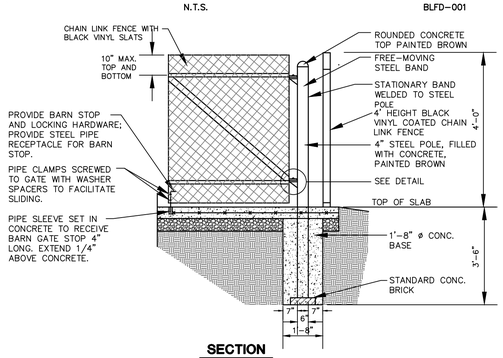

SECTION

TRASH ENCLOSURE DETAIL

N.T.S. BLFD–001

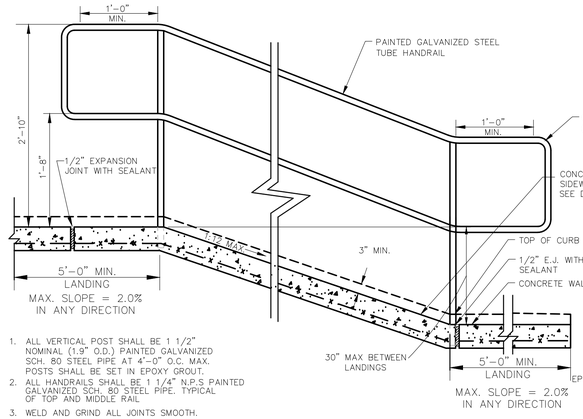

1. ALL VERTICAL POST SHALL BE 1 1/2" NOMINAL (1.9" O.D.) PAINTED GALVANIZED SCH. 80 STEEL PIPE AT 4'–0" O.C. MAX. POSTS SHALL BE SET IN EPOXY GROUT.
2. ALL HANDRAILS SHALL BE 1 1/4" N.P.S PAINTED GALVANIZED SCH. 80 STEEL PIPE. TYPICAL OF TOP AND MIDDLE RAIL
3. WELD AND GRIND ALL JOINTS SMOOTH.

CONCRETE SIDEWALK RAMP DETAIL

N.T.S.

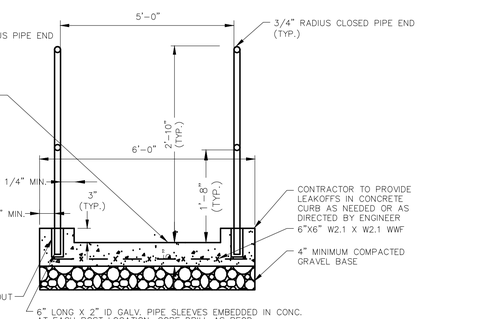

CONCRETE STAIR DETAIL

N.T.S.

NOT FOR CONSTRUCTION
FOR PERMITTING PURPOSES ONLY

© 2020 BL COMPANIES, INC. THESE DRAWINGS SHALL NOT BE UTILIZED BY ANY PERSON, FIRM OR CORPORATION WITHOUT THE SPECIFIC WRITTEN PERMISSION OF BL COMPANIES.

Architecture
Engineering
Environmental
Land Surveying
BL Companies
355 Research Parkway
Meriden, CT 06450
(203) 630-1406
(203) 630-2615 Fax

Garden Homes
ROSE EQUITIES
Owner-Builders since 1949

STATE OF CONNECTICUT CHRISTOPHER B. GAUDIO No. 27798 LICENSED PROFESSIONAL ENGINEER

THE RESIDENCES AT MAIN
K & K DEVELOPERS, INC.
5085 MAIN STREET
TRUMBULL, CONNECTICUT

REVISIONS No.	Date	Desc.
1.	4/30/2020	REVISED PER STAFF COMMENTS
2.	8/10/2020	REVISED PER STAFF COMMENTS

Designed	A.T.K.
Drawn	A.T.K.
Reviewed	J.J.S.
Scale	NONE
Project No.	1800513
Date	05/28/2020
CAD File: DN180051301	

Title
DETAILS SHEET

Sheet No.
DN-2

Xref (s): : BD180051301

8/7/2020, JDOJA, G:\CIVIL\18\DJA\180051301\DWG\DN180051301.DWG DN-2 24X36.

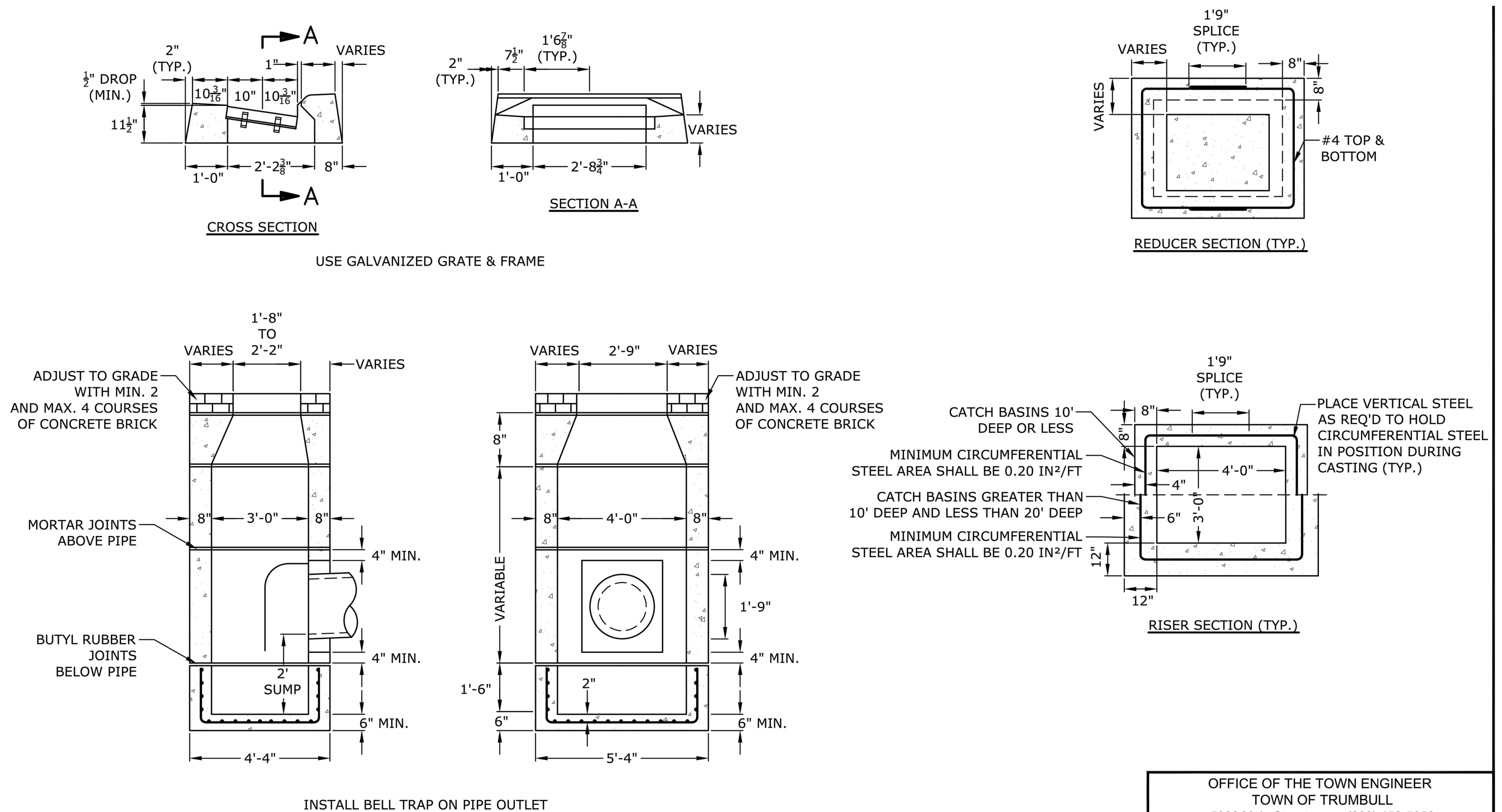

CONNECTICUT DEPARTMENT OF TRANSPORTATION

TYPE "C" CATCH BASIN

NO SCALE

OFFICE OF THE TOWN ENGINEER TOWN OF TRUMBULL 5866 Main Street (203) 452-5050	
TYPE "C" CATCH BASIN DETAIL TRUMBULL, CONNECTICUT	
Scale: NTS	Date: 8/15/2014
Drawn by:	Grid:
Approved by:	Sheet: ST-01A

NOTES:

1. REINFORCEMENT SHALL CONFORM TO ASTM A615, GRADE 60.
2. DETAILS ON THIS SHEET SHOW STANDARD REINFORCEMENT. WELDED WIRE FABRIC WITH AN AREA EQUAL TO OR GREATER THAN THE REINFORCING SHOWN MAY BE SUBSTITUTED.
3. ALL LAP SPLICES, DEVELOPMENT LENGTHS, BENDS FOR REINFORCEMENT, AND WELDED WIRE FABRIC SHALL CONFORM TO AASHTO STANDARD SPECIFICATIONS FOR HIGHWAY BRIDGES.
4. ALL REINFORCEMENT SHALL HAVE A MINIMUM CLEAR COVER OF 2", EXCEPT FOR BENEATH BOTTOM REINFORCEMENT IN TOP SLABS, WHERE THE MINIMUM MAY BE 1½"
5. MINIMUM CONCRETE COMPRESSIVE STRENGTH FC'=4,000PSI SHALL BE OBTAINED BEFORE SHIPPING.
6. BASES AND RISERS AT A DEPTH OF 20' AND GREATER SHALL BE DESIGNED BY THE CONTRACTOR AND WORKING DRAWINGS SHALL BE SUBMITTED TO THE ENGINEER FOR REVIEW.
7. SEE STANDARD CTDOT DRAWING 507-K FOR CATCH BASIN FRAMES AND GRATES.
8. FOR DOT MAINTENANCE PERSONNEL, RISERS MAY BE PREFABRICATED WITH PIPE OPENINGS IN ALL FOUR WALLS. ADEQUATE REINFORCING AROUND PIPE OPENINGS TO CONFORMING TO THESE PLANS SHALL BE PROVIDED. ANY RISERS USED WHERE A PIPE OPENING IS TO REMAIN IN PLACE MUST BE FORMED UP WITH BRICK AS DIRECTED BY THE ENGINEER.
9. RISERS SHALL NEVER HAVE CORNER PIPE ENTRIES. WHERE THE ALIGNMENT OF THE PIPE WITH RESPECT TO THE CORNER OF THE CATCH BASIN CANNOT BE CHANGED, A ROUND STRUCTURE CONFORMING TO ASTM C478 SHALL BE USED. REINFORCING FOR THE ROUND TOP SLAB WITH A RECTANGULAR OPENING SHALL CONFORM TO DETAILS SHOWN HERE.
10. ALL PIPE OPENINGS SHALL BE CLOSED USING MATERIALS WHICH CONFORM TO STATE OF CONNECTICUT STANDARD SPECIFICATIONS SECTION M.08.02. IF THE ENGINEER DETERMINES THAT THE CLOSURE OF ANY PIPE OPENING IS UNSATISFACTORY, THE CONTRACTOR SHALL RECLOSE SAID OPENING AT NO ADDITIONAL COST TO THE STATE. KNOCKOUTS FOR PIPE OPENINGS SHALL NOT RESULT IN A REDUCED WALL THICKNESS.
11. THE LATEST STATE OF CONNECTICUT STANDARD SPECIFICATIONS AND SUPPLEMENTAL SHALL GOVERN.
12. FOR ADDITIONAL DETAILS, SEE OTHER CATCH BASIN SHEETS.
13. WALL THICKNESS OF ALL CB'S OVER 10' DEEP SHALL BE INCREASED TO 12" THICK. INSIDE DIMENSION SHALL REMAIN THE SAME. (THE 12" THICKNESS SHALL START AFTER THE FIRST 10")
14. BUTYL RUBBER JOINT SEAL SHALL CONFORM TO AASHTO M-198 AND MORTAR SHALL CONFORM TO THE LATEST STATE OF CONNECTICUT STANDARD SPECIFICATIONS MATERIAL SECTION M11.04.
15. SHRINKAGE AND TEMPERATURE REINFORCEMENT SHALL BE PROVIDED IN THE TOPS OF SLABS. THE TOTAL AREA OF REINFORCEMENT PROVIDED SHALL BE AT LEAST 0.125 IN²/FT IN EACH DIRECTION. THE MAXIMUM SPACING OF THIS REINFORCEMENT SHALL NOT EXCEED 18 INCHES.
16. THE DETAILS SHOWN IN THE PLAN VIEW FOR THE PRECAST CONCRETE ROUND STRUCTURES SHALL ALSO BE USED FOR CONVERTING MANHOLES TO CATCH BASINS.
17. SET CATCH BASIN TOPS ON 6" MINIMUM BRICK OR BLOCK LEVELING COURSE.
18. AFFIX PLAQUE TO ALL CATCH BASINS STATING "DUMP NO WASTE - DRAINS TO LONG ISLAND SOUND". COST FOR PLAQUE SHALL BE INCLUDED IN THE CONTRACT UNIT COST FOR CATCH BASINS.

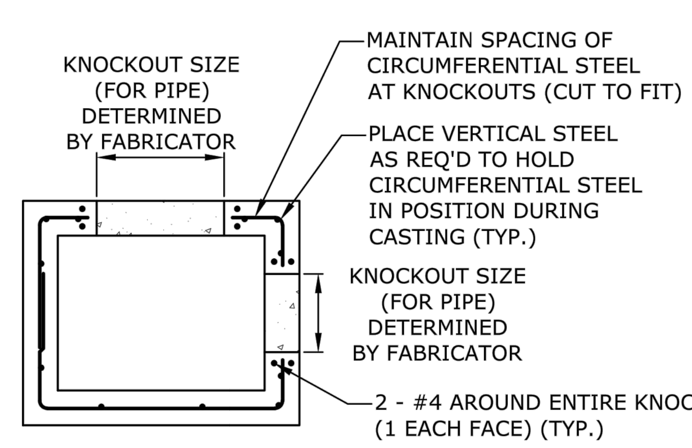

TYPICAL SECTION THRU RISER WITH KNOCKOUTS

CONNECTICUT DEPARTMENT OF TRANSPORTATION

TYPE "C" CATCH BASIN

NO SCALE

OFFICE OF THE TOWN ENGINEER TOWN OF TRUMBULL 5866 Main Street (203) 452-5050	
TYPE "C" CATCH BASIN DETAIL TRUMBULL, CONNECTICUT	
Scale: NTS	Date: 8/15/2014
Drawn by:	Grid:
Approved by:	Sheet: SW-01B

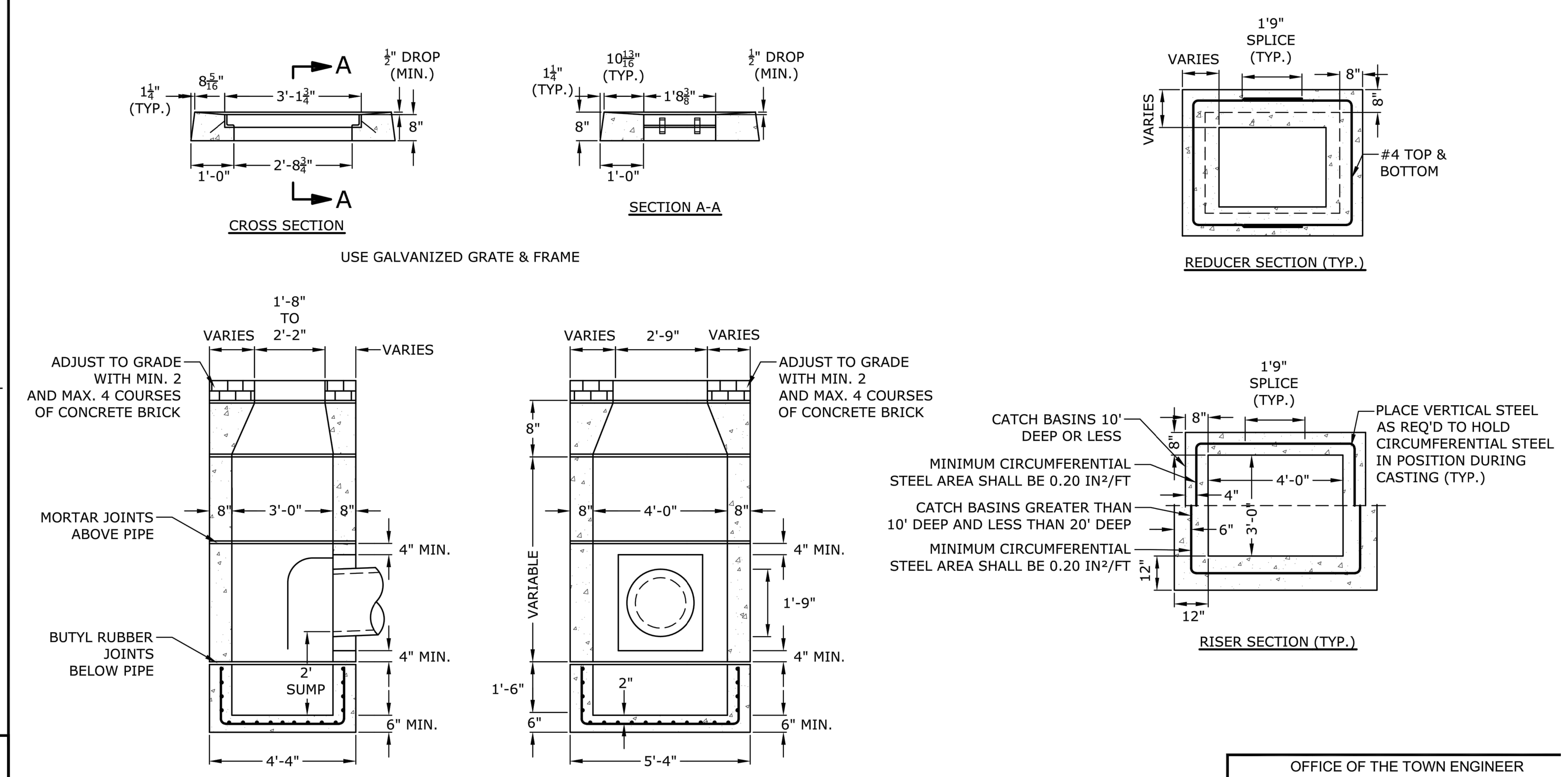

CONNECTICUT DEPARTMENT OF TRANSPORTATION

TYPE "C-L" CATCH BASIN

NO SCALE

OFFICE OF THE TOWN ENGINEER TOWN OF TRUMBULL 5866 Main Street (203) 452-5050	
TYPE "C-L" CATCH BASIN DETAIL TRUMBULL, CONNECTICUT	
Scale: NTS	Date: 8/15/2014
Drawn by:	Grid:
Approved by:	Sheet: SW-06A

NOTES:

1. REINFORCEMENT SHALL CONFORM TO ASTM A615, GRADE 60.
2. DETAILS ON THIS SHEET SHOW STANDARD REINFORCEMENT. WELDED WIRE FABRIC WITH AN AREA EQUAL TO OR GREATER THAN THE REINFORCING SHOWN MAY BE SUBSTITUTED.
3. ALL LAP SPLICES, DEVELOPMENT LENGTHS, BENDS FOR REINFORCEMENT, AND WELDED WIRE FABRIC SHALL CONFORM TO AASHTO STANDARD SPECIFICATIONS FOR HIGHWAY BRIDGES.
4. ALL REINFORCEMENT SHALL HAVE A MINIMUM CLEAR COVER OF 2", EXCEPT FOR BENEATH BOTTOM REINFORCEMENT IN TOP SLABS, WHERE THE MINIMUM MAY BE 1½"
5. MINIMUM CONCRETE COMPRESSIVE STRENGTH FC'=4,000PSI SHALL BE OBTAINED BEFORE SHIPPING.
6. BASES AND RISERS AT A DEPTH OF 20' AND GREATER SHALL BE DESIGNED BY THE CONTRACTOR AND WORKING DRAWINGS SHALL BE SUBMITTED TO THE ENGINEER FOR REVIEW.
7. SEE STANDARD DRAWING 507-K FOR CATCH BASIN FRAMES AND GRATES.
8. FOR DOT MAINTENANCE PERSONNEL, RISERS MAY BE PREFABRICATED WITH PIPE OPENINGS IN ALL FOUR WALLS. ADEQUATE REINFORCING AROUND PIPE OPENINGS TO CONFORMING TO THESE PLANS SHALL BE PROVIDED. ANY RISERS USED WHERE A PIPE OPENING IS TO REMAIN IN PLACE MUST BE FORMED UP WITH BRICK AS DIRECTED BY THE ENGINEER.
9. RISERS SHALL NEVER HAVE CORNER PIPE ENTRIES. WHERE THE ALIGNMENT OF THE PIPE WITH RESPECT TO THE CORNER OF THE CATCH BASIN CANNOT BE CHANGED, A ROUND STRUCTURE CONFORMING TO ASTM C478 SHALL BE USED. REINFORCING FOR THE ROUND TOP SLAB WITH A RECTANGULAR OPENING SHALL CONFORM TO DETAILS SHOWN HERE.
10. ALL PIPE OPENINGS SHALL BE CLOSED USING MATERIALS WHICH CONFORM TO STATE OF CONNECTICUT STANDARD SPECIFICATIONS SECTION M.08.02. IF THE ENGINEER DETERMINES THAT THE CLOSURE OF ANY PIPE OPENING IS UNSATISFACTORY, THE CONTRACTOR SHALL RECLOSE SAID OPENING AT NO ADDITIONAL COST TO THE STATE. KNOCKOUTS FOR PIPE OPENINGS SHALL NOT RESULT IN A REDUCED WALL THICKNESS.
11. THE LATEST STATE OF CONNECTICUT STANDARD SPECIFICATIONS AND SUPPLEMENTALS SHALL GOVERN.
12. FOR ADDITIONAL DETAILS, SEE OTHER CATCH BASIN SHEETS.
13. WALL THICKNESS OF ALL CB'S OVER 10' DEEP SHALL BE INCREASED TO 12" THICK. INSIDE DIMENSION SHALL REMAIN THE SAME. (THE 12" THICKNESS SHALL START AFTER THE FIRST 10")
14. BUTYL RUBBER JOINT SEAL SHALL CONFORM TO AASHTO M-198 AND MORTAR SHALL CONFORM TO THE LATEST STATE OF CONNECTICUT STANDARD SPECIFICATIONS MATERIAL SECTION M11.04.
15. SHRINKAGE AND TEMPERATURE REINFORCEMENT SHALL BE PROVIDED IN THE TOPS OF SLABS. THE TOTAL AREA OF REINFORCEMENT PROVIDED SHALL BE AT LEAST 0.125 IN²/FT IN EACH DIRECTION. THE MAXIMUM SPACING OF THIS REINFORCEMENT SHALL NOT EXCEED 18 INCHES.
16. THE DETAILS SHOWN IN THE PLAN VIEW FOR THE PRECAST CONCRETE ROUND STRUCTURES SHALL ALSO BE USED FOR CONVERTING MANHOLES TO CATCH BASINS.

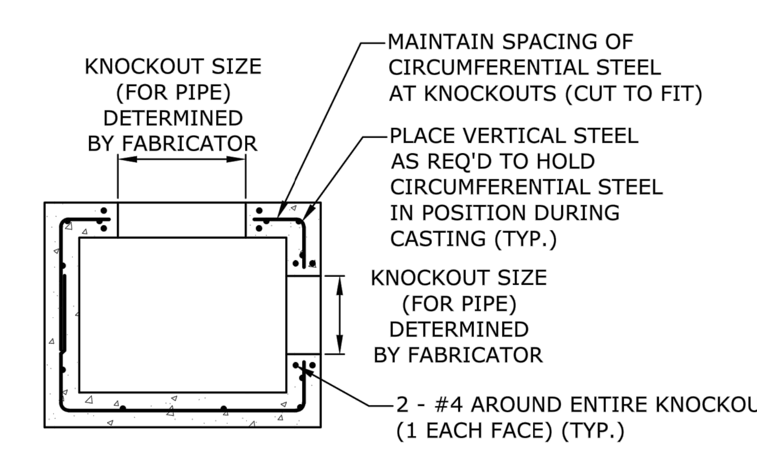

TYPICAL SECTION THRU RISER WITH KNOCKOUTS

CONNECTICUT DEPARTMENT OF TRANSPORTATION

TYPE "C-L" CATCH BASIN

NO SCALE

OFFICE OF THE TOWN ENGINEER TOWN OF TRUMBULL 5866 Main Street (203) 452-5050	
TYPE "C-L" CATCH BASIN DETAIL TRUMBULL, CONNECTICUT	
Scale: NTS	Date: 8/15/2014
Drawn by:	Grid:
Approved by:	Sheet: SW-06B

NOT FOR CONSTRUCTION
FOR PERMITTING PURPOSES ONLY

Architecture
Engineering
Environmental
Land Surveying
BL Companies
355 Research Parkway
Meriden, CT 06450
(203) 630-1406
(203) 630-2615 Fax

Garden Homes

ROSE EQUITIES
Owner-Builders since 1949

STATE OF CONNECTICUT CHRISTOPHER D. GAGNON No. 25798 LICENSED PROFESSIONAL ENGINEER

THE RESIDENCES AT MAIN
K & K DEVELOPERS, INC.
5085 MAIN STREET
TRUMBULL, CONNECTICUT

REVISIONS

No.	Date	Desc.
1.	6/30/2020	REVISED PER STAFF COMMENTS
2.	8/10/2020	REVISED PER STAFF COMMENTS

Designed	A.T.K.
Drawn	A.T.K.
Reviewed	J.J.S.
Scale	NONE
Project No.	1800513
Date	05/28/2020
CAD File:	DN180051301

Title
DETAILS SHEET

Sheet No.
DN-3

Xref (s): ; BD180051301

8/17/2020, JSOJKA, G:\JOBS18\04\1800513\DWG\DN180051301.DWG,DN-3 24X36.

© 2020 BL COMPANIES, INC. THESE DRAWINGS SHALL NOT BE UTILIZED BY ANY PERSON, FIRM OR CORPORATION WITHOUT THE SPECIFIC WRITTEN PERMISSION OF BL COMPANIES.

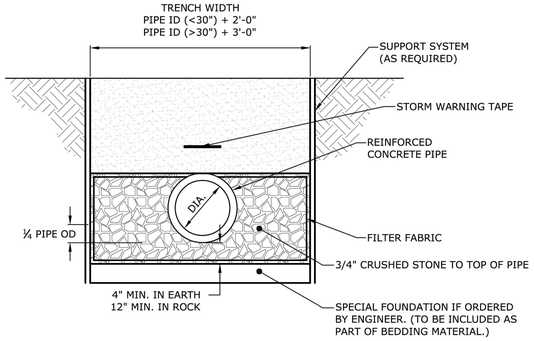

CIRCULAR R.C.P. TRENCH BEDDING

NO SCALE

OFFICE OF THE TOWN ENGINEER TOWN OF TRUMBULL 5866 Main Street (203) 452-5050	
CIRCULAR R.C.P. TRENCH BEDDING DETAIL TRUMBULL, CONNECTICUT	
Scale: NTS	Date: 8/15/2014
Drawn by:	Grid:
Approved by:	Sheet: SW-03

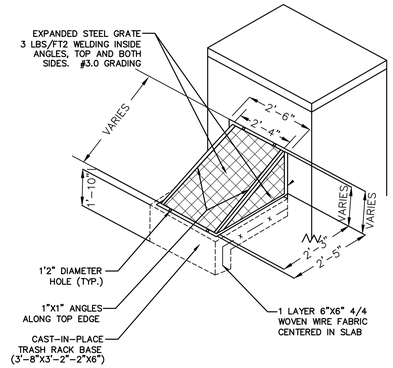

PRIMARY OUTLET TRASH RACK DETAIL

N.T.S.

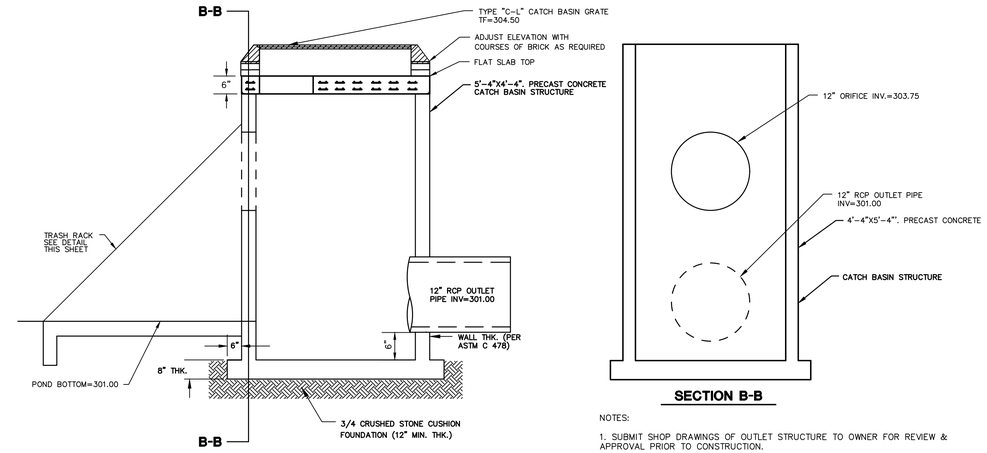

SECTION B-B

NOTES:

1. SUBMIT SHOP DRAWINGS OF OUTLET STRUCTURE TO OWNER FOR REVIEW & APPROVAL PRIOR TO CONSTRUCTION.

2. SEE GRADING AND DRAINAGE PLANS FOR OUTLET STRUCTURE LOCATION.

DETENTION POND P-3 OUTLET CONTROL STRUCTURE (OCS-03)

N.T.S.

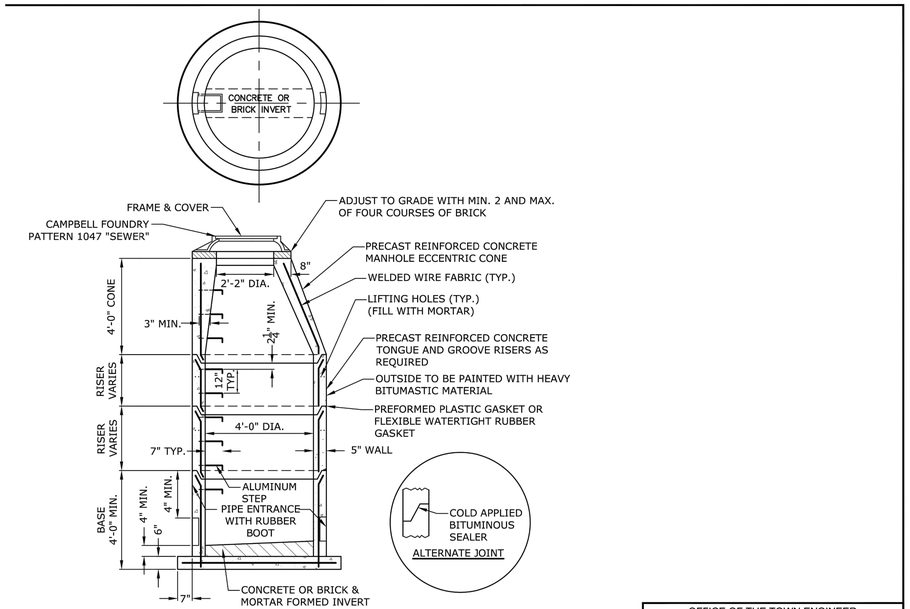

5' OR 6' DIA. PRECAST BASES MAY BE USED WHEN REQUIRED DUE TO SIZE OR NUMBER OF PIPES AT THE MANHOLE.
PRECAST REDUCERS WILL BE PLACED ABOVE THE 5' & 6' BASES AS DIRECTED BY THE ENGINEER.
WALL THICKNESS TO INCREASE 1" FOR EACH 1' OF INSIDE DIAMETER INCREASE.

PRECAST SANITARY MANHOLE

NO SCALE

OFFICE OF THE TOWN ENGINEER TOWN OF TRUMBULL 5866 Main Street (203) 452-5050	
PRECAST SANITARY MANHOLE DETAIL TRUMBULL, CONNECTICUT	
Scale: NTS	Date: 8/15/2014
Drawn by:	Grid:
Approved by:	Sheet: SS-05

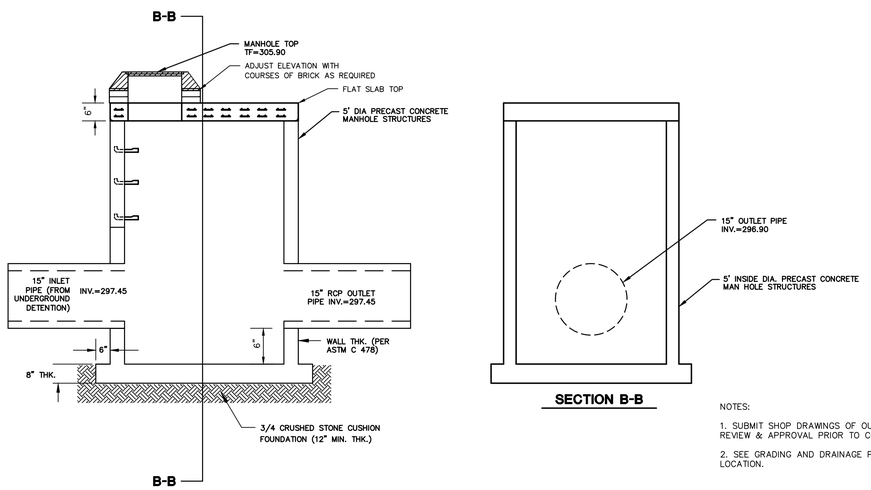

SECTION B-B

NOTES:

1. SUBMIT SHOP DRAWINGS OF OUTLET STRUCTURE TO OWNER FOR REVIEW & APPROVAL PRIOR TO CONSTRUCTION.

2. SEE GRADING AND DRAINAGE PLANS FOR OUTLET STRUCTURE LOCATION.

DETENTION BASIN P-1 OUTLET CONTROL STRUCTURE (OCS-01)

N.T.S.

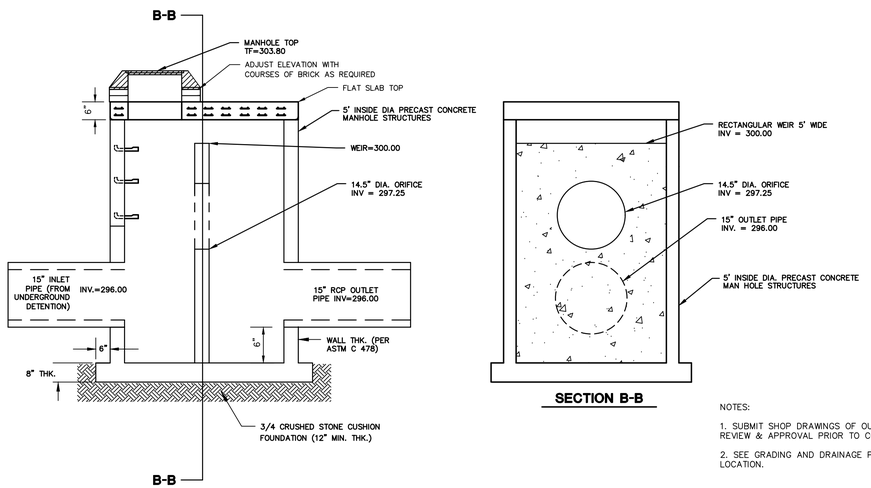

SECTION B-B

NOTES:

1. SUBMIT SHOP DRAWINGS OF OUTLET STRUCTURE TO OWNER FOR REVIEW & APPROVAL PRIOR TO CONSTRUCTION.

2. SEE GRADING AND DRAINAGE PLANS FOR OUTLET STRUCTURE LOCATION.

DETENTION BASIN P-2 OUTLET CONTROL STRUCTURE (OCS-02)

N.T.S.

NOT FOR CONSTRUCTION
FOR PERMITTING PURPOSES ONLY

© 2020 BL COMPANIES, INC. THESE DRAWINGS SHALL NOT BE UTILIZED BY ANY PERSON, FIRM OR CORPORATION WITHOUT THE SPECIFIC WRITTEN PERMISSION OF BL COMPANIES.

8/17/2020, JSD JKA, G:\CADD\18DATA\1800513\DWG\DN1800513D1.DWG DN-4 24X36.

Architecture
Engineering
Environmental
Land Surveying
BL Companies
355 Research Parkway
Meriden, CT 06450
(203) 630-1406
(203) 630-2615 Fax

Garden Homes

ROSE EQUITIES
Owner-Builders since 1949

STATE OF CONNECTICUT
CHRISTOPHER R. GAUDIO
No. 27798
LICENSED
PROFESSIONAL ENGINEER

THE RESIDENCES AT MAIN
K & K DEVELOPERS, INC.
5085 MAIN STREET
TRUMBULL, CONNECTICUT

REVISIONS
No. Date Desc.
1. 6/30/2020 REVISED PER STAFF COMMENTS
2. 8/10/2020 REVISED PER STAFF COMMENTS

Designed	A.T.K.
Drawn	A.T.K.
Reviewed	J.J.S.
Scale	NONE
Project No.	1800513
Date	05/28/2020
CAD File: DN1800513D1	

Title

DETAILS SHEET

Sheet No.

DN-4

Xref (s) : : BD180051301

CULTEC Recharger® 902HD Stormwater Chamber

The Recharger® 902HD is a 48" (1219 mm) tall, high capacity chamber. Typically when using this model, fewer chambers are required resulting in less labor and a smaller installation area. The Recharger® 902HD has the side portal internal manifold feature. HVLV® FC-48 Feed Connectors are inserted into the side portals to create the internal manifold.

Recharger 902HD Chamber

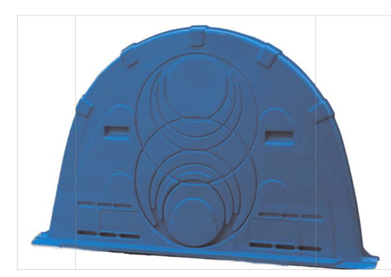

Recharger 902HD End Cap

Recharger 902HD Chamber	
Size (L x W x H)	4.25' x 78" x 48"
	1.30 m x 1981 mm x 1219 mm
Installed Length	3.67'
	1.12 m
Length Adjustment per Row - with two end caps installed	1.03'
	0.31 m
Length Adjustment per Row - when not using end caps	0.58'
	0.18 m
Chamber Storage	17.31 ft³/ft
	1.61 m³/m
	63.47 ft³/unit
	1.80 m³/unit
Min. Installed Storage	27.06 ft³/ft
	2.53 m³/m
	99.28 ft³/unit
	2.81 m³/unit
Min. Area Required	26.58 ft²
	2.47 m²
Chamber Weight	83.0 lbs
	37.65 kg
Shipping	15 chambers/skid
	1,370 lbs/skid
	14 skids/48' flatbed
Min. Center-to-Center Spacing	7.25'
	2.21 m
Max. Allowable Cover	8.3'
	2.53 m
Max. Allowable O.D. in Side Portal	10" HDPE, 12" PVC
	250 mm HDPE, 300 mm PVC
Compatible Feed Connector	HVLV FC-48 Feed Connector

Calculations are based on installed chamber length.
All above values are nominal.
Includes 12" (305 mm) stone above crown of chamber and typical stone surround at 7.25' (2.21 m) center-to-center spacing and stone foundation depth as listed in table.
Stone void calculated at 40%.

	Stone Foundation Depth		
	9"	12"	18"
	229 mm	305 mm	457 mm
Chamber and Stone Storage Per Chamber	99.28 ft³	101.94 ft³	107.26 ft³
	2.81 m³	2.89 m³	3.04 m³
Min. Effective Depth	5.75'	6.00'	6.5'
	1.75 m	1.83 m	1.98 m
Stone Required Per Chamber	3.32 yd³	3.56 yd³	4.05 yd³
	2.54 m³	2.72 m³	3.06 m³

Recharger 902HD End Cap	
Size (L x W x H)	9.7" x 78" x 48.5"
	246 mm x 1982 mm x 1231 mm
Installed Length	6.2"
	157 mm
End Cap Storage	5.34 ft³/ft
	0.50 m³/m
	2.76 ft³/unit
	0.08 m³/unit
Min. Installed Storage	19.88 ft³/ft
	1.85 m³/m
	10.28 ft³/unit
	0.29 m³/unit
End Cap Weight	52.0 lbs
	23.59 kg
Shipping	15 end caps/skid
	905 lbs/skid
	14 skids/48' flatbed
Max. Inlet Opening in End Cap	30" HDPE, 36" PVC
	750 mm HDPE, 900 mm PVC

Calculations are based on installed chamber length.
All above values are nominal.
Min. installed storage includes 9" (229 mm) stone base, 12" (305 mm) stone above crown of chamber and typical stone surround at 7.25' (2.21 m) center-to-center spacing.

For more information, contact CULTEC at (203) 775-4416 or visit www.cultec.com. 1

© CULTEC, Inc., March 2020 SUB902HDN 03-20

CULTEC Recharger® 902HD Stormwater Chamber

Three View Drawing

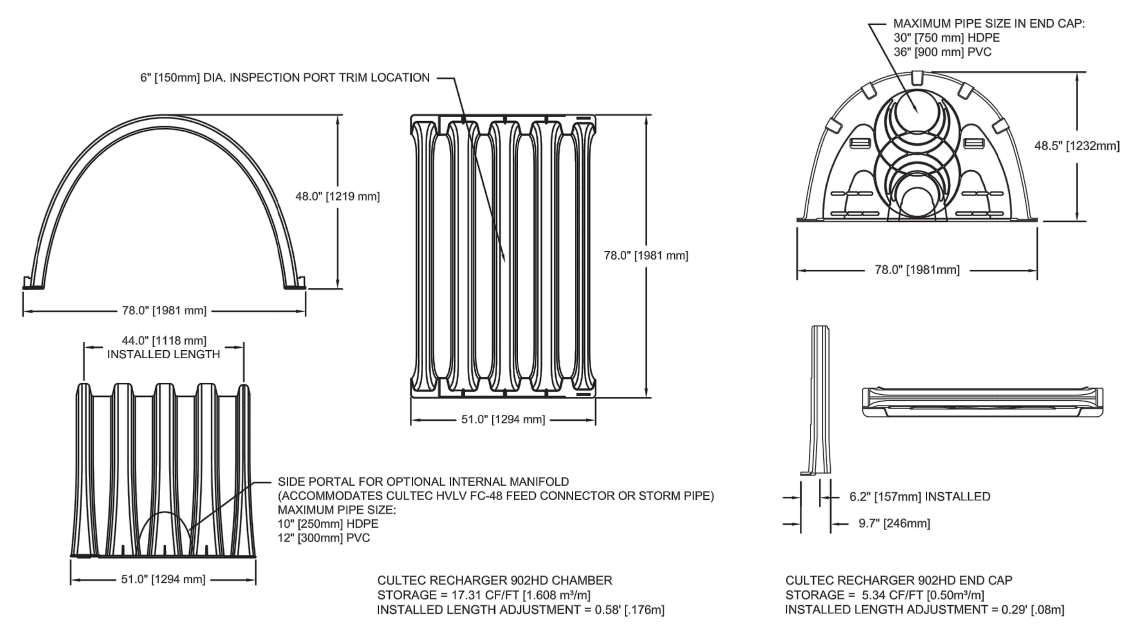

Typical Interlock Installation

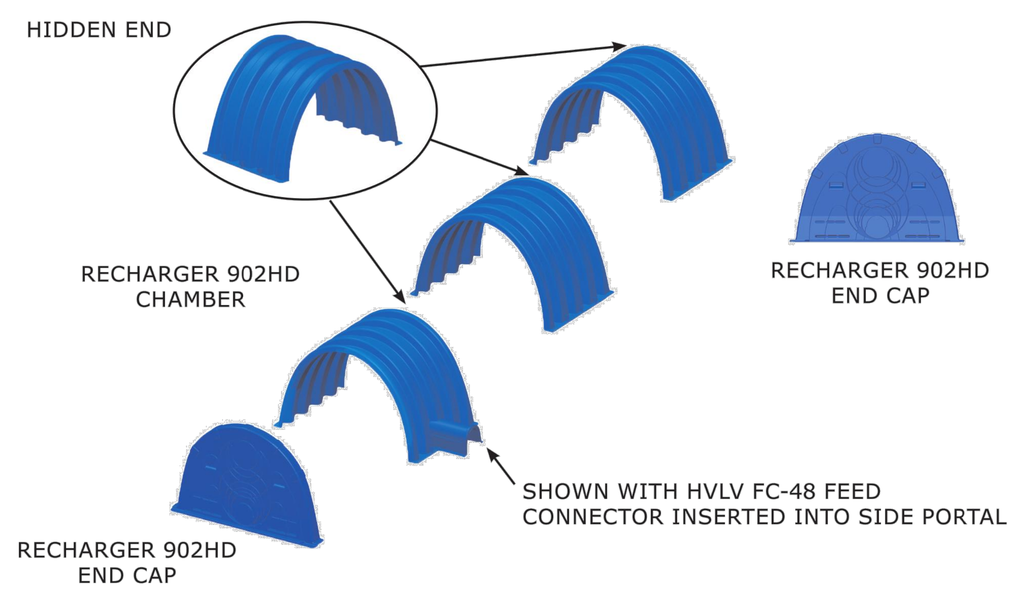

For more information, contact CULTEC at (203) 775-4416 or visit www.cultec.com. 2

© CULTEC, Inc., March 2020 SUB902HDN 03-20

CULTEC Recharger® 902HD Stormwater Chamber

Plan View Drawing

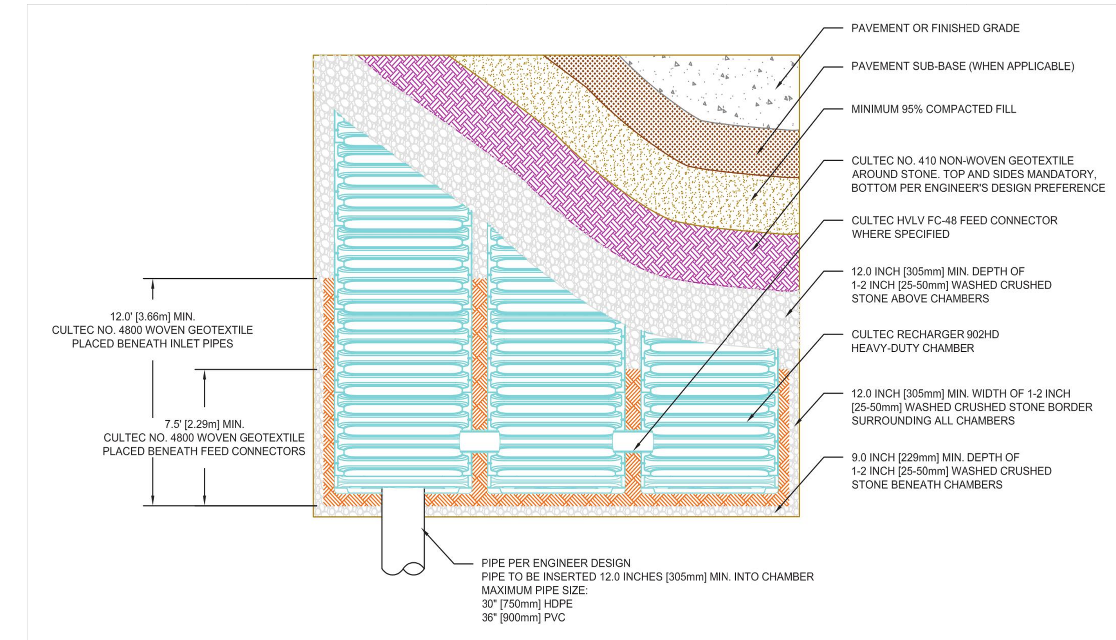

Typical Cross Section for Traffic Application

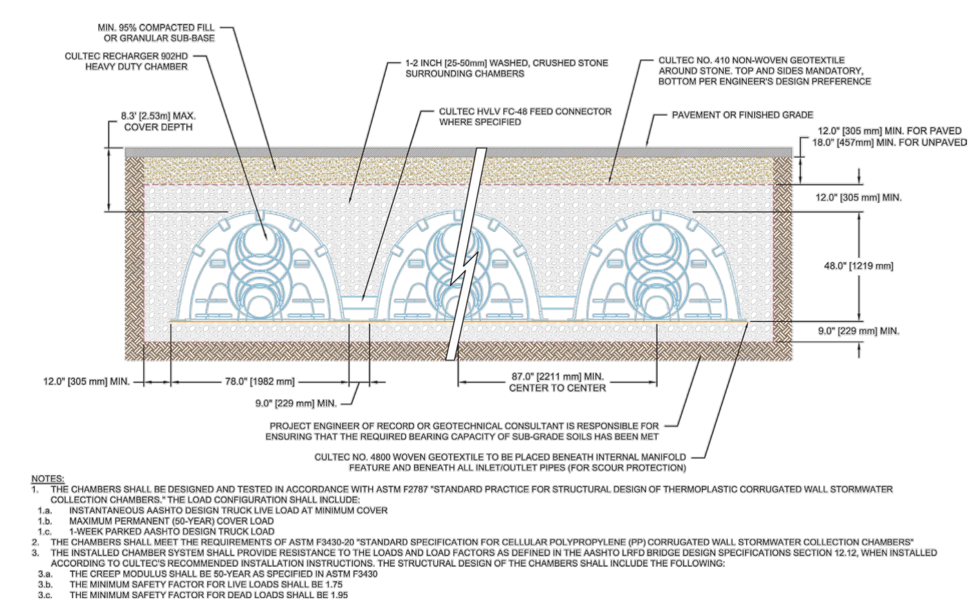

PROJECT ENGINEER OF RECORD OR GEOTECHNICAL CONSULTANT IS RESPONSIBLE FOR ENSURING THAT THE REQUIRED BEARING CAPACITY OF SUB-GRADE SOILS HAS BEEN MET

CULTEC NO. 4800 WOVEN GEOTEXTILE TO BE PLACED BENEATH INTERNAL MANIFOLD FEATURE AND BENEATH ALL INLET/OUTLET PIPES (FOR SCOUR PROTECTION)

NOTES:
1. THE CHAMBERS SHALL BE DESIGNED AND TESTED IN ACCORDANCE WITH ASTM F2787 "STANDARD PRACTICE FOR STRUCTURAL DESIGN OF THERMOPLASTIC CORRUGATED WALL STORMWATER COLLECTION CHAMBERS." THE LOAD CONFIGURATION SHALL INCLUDE:
   1.a. INSTANTANEOUS AASHTO DESIGN TRUCK LIVE LOAD AT MINIMUM COVER
   1.b. MAXIMUM PERMANENT (50-YEAR) COVER LOAD
   1.c. 1-WEEK PARKED AASHTO DESIGN TRUCK LOAD
2. THE CHAMBERS SHALL MEET THE REQUIREMENTS OF ASTM F3430-20 "STANDARD SPECIFICATION FOR CELLULAR POLYPROPYLENE (PP) CORRUGATED WALL STORMWATER COLLECTION CHAMBERS"
3. THE INSTALLED CHAMBER SYSTEM SHALL PROVIDE RESISTANCE TO THE LOADS AND LOAD FACTORS AS DEFINED IN THE AASHTO LRFD BRIDGE DESIGN SPECIFICATIONS SECTION 12.12, WHEN INSTALLED ACCORDING TO CULTEC'S RECOMMENDED INSTALLATION INSTRUCTIONS. THE STRUCTURAL DESIGN OF THE CHAMBERS SHALL INCLUDE THE FOLLOWING:
   3.a. THE CREEP MODULUS SHALL BE 50-YEAR AS SPECIFIED IN ASTM F3430
   3.b. THE MINIMUM SAFETY FACTOR FOR LIVE LOADS SHALL BE 1.75
   3.c. THE MINIMUM SAFETY FACTOR FOR DEAD LOADS SHALL BE 1.95

For more information, contact CULTEC at (203) 775-4416 or visit www.cultec.com. 3

© CULTEC, Inc., March 2020 SUB902HDN 03-20

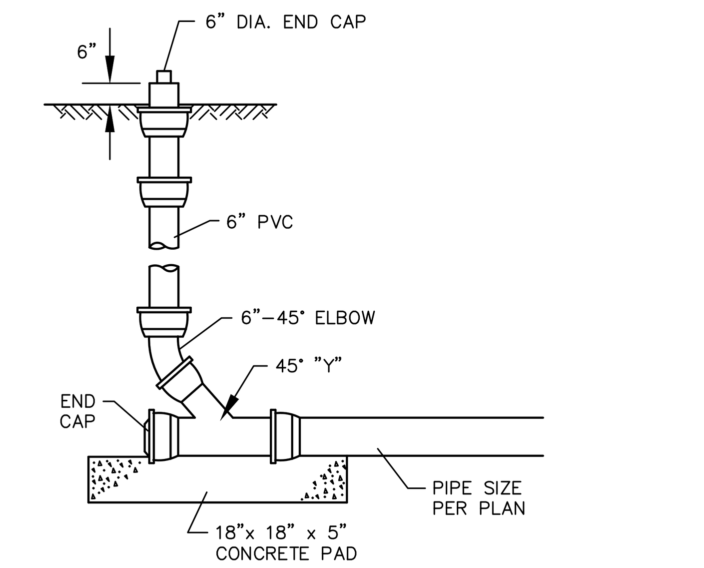

CLEANOUT DETAIL IN LANDSCAPED AREA

N.T.S BLSS–007

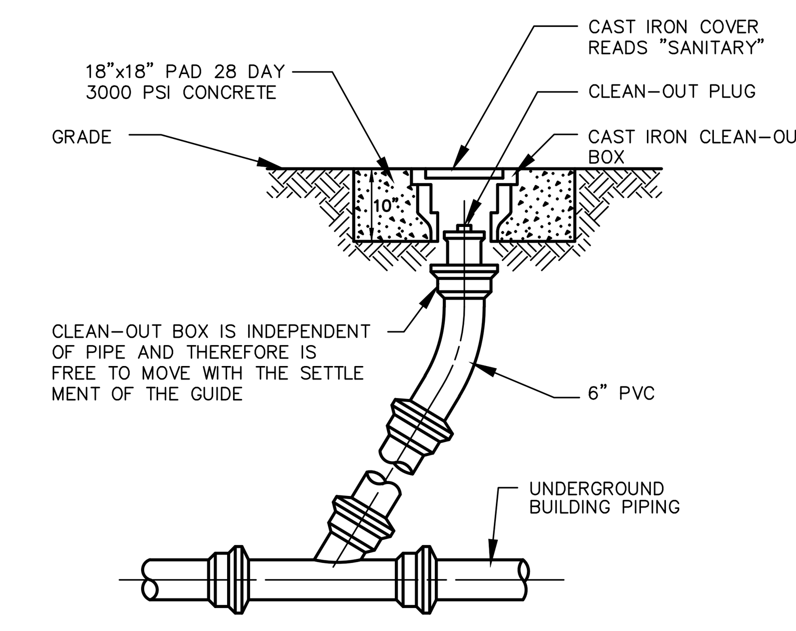

CLEANOUT DETAIL IN PAVED AREAS

N.T.S BLSS–008

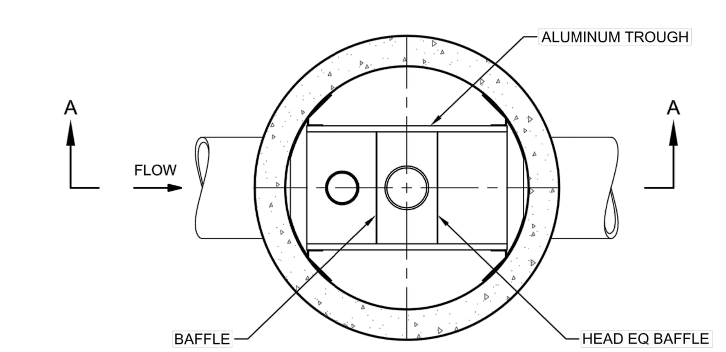

PLAN VIEW B-B

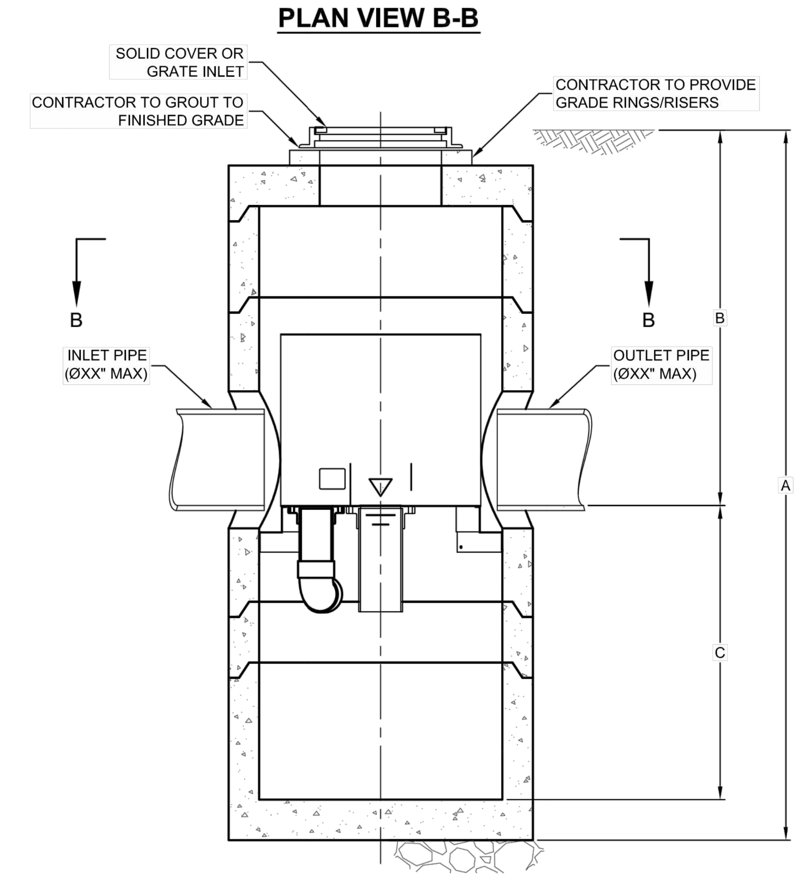

SECTION A-A

VortSentry®

THIS PRODUCT MAY BE PROTECTED BY ONE OR MORE OF THE FOLLOWING U.S. PATENTS: 6,991,114; 7,296,692; RELATED FOREIGN PATENTS, OR OTHER PATENTS PENDING.

I:\STORMWATER\COMMOPS\26 VORTSENTRY HS\40 STANDARD DRAWINGS\DWG\VSHS-DTL.DWG 5/16/2014 4:31 PM

VORTSENTRY HS DESIGN NOTES

VSHS RATED TREATMENT CAPACITY IS SHOWN IN THE TABLE BELOW, OR PER LOCAL REGULATIONS. MAXIMUM HYDRAULIC INTERNAL BYPASS CAPACITY VARIES. CONTACT YOUR CONTECH REPRESENTATIVE FOR ADITIONAL INFORMATION.

THE STANDARD SOLID COVER CONFIGURATION IS SHOWN. ALTERNATE CONFIGURATIONS ARE AVAILABLE AND ARE LISTED BELOW.

	CONFIGURATION OPTION DESCRIPTION
	GRATE INLET (NO INLET PIPE)
	GRATE INLET WITH INLET PIPE

VORTSENTRY HS GENERAL INFORMATION

Model	Manhole Diameter (ID)		Total Treatment Flow Rate		Typical Total Distance Rim to Outside Bottom A		Typical Distance Rim to Invert B		Typical Depth Below Invert (inside) C		Approximate Minimum Distance Rim to Invert		Maximum Pipe Diameter (ID)	
	FT	mm	CFS	L/S	FT	m	FT	m	FT	mm	FT	m	IN	mm
HS36	3	900	0.55	15.6	10.16	3.10	4.08	1.24	5.58	1702	3.00	0.91	18	450
HS48	4	1200	1.20	34.0	13.25	4.04	6.00	1.83	6.75	2057	4.00	1.22	24	600
HS60	5	1500	2.20	62.3	15.13	4.61	6.50	1.98	7.96	2426	4.82	1.47	30	750
HS72	6	1800	3.70	104.8	16.56	5.05	6.75	2.06	9.15	2788	5.59	1.70	36	900
HS84	7	2100	5.60	158.6	18.85	5.75	7.75	2.36	10.35	3156	5.00	1.52	42	1050
HS96	8	2400	8.10	229.4	20.87	6.36	8.50	2.59	11.54	3518	6.91	2.11	48	1200

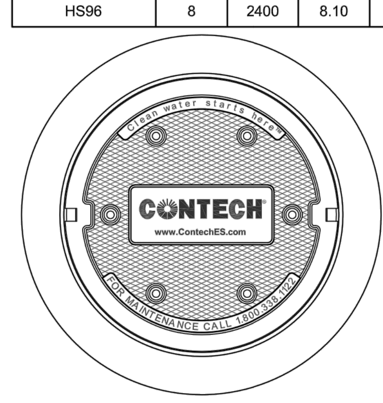

FRAME AND COVER
(DIAMETER VARIES)
N.T.S.

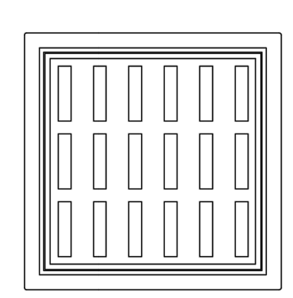

FRAME AND GRATE
(24" SQUARE)
N.T.S.

SITE SPECIFIC DATA REQUIREMENTS

STRUCTURE ID			
WATER QUALITY FLOW RATE (CFS)			*
PEAK FLOW RATE (CFS)			*
RETURN PERIOD OF PEAK FLOW (YRS)			*
PIPE DATA:	I.E.	MATERIAL	DIAMETER
INLET PIPE 1	*	*	*
OUTLET PIPE	*	*	*
RIM ELEVATION			*
ANTI-FLOTATION BALLAST		WIDTH	HEIGHT
		*	*
NOTES/SPECIAL REQUIREMENTS:			

* PER ENGINEER OF RECORD

GENERAL NOTES
1. CONTECH TO PROVIDE ALL MATERIALS UNLESS NOTED OTHERWISE.
2. DIMENSIONS MARKED WITH ( ) ARE REFERENCE DIMENSIONS. ACTUAL DIMENSIONS MAY VARY.
3. FOR FABRICATION DRAWINGS WITH DETAILED STRUCTURE DIMENSIONS AND WEIGHT, PLEASE CONTACT YOUR CONTECH ENGINEERED SOLUTIONS LLC REPRESENTATIVE. www.ContechES.com
4. VORTSENTRY HS WATER QUALITY STRUCTURE SHALL BE IN ACCORDANCE WITH ALL DESIGN DATA AND INFORMATION CONTAINED IN THIS DRAWING.
5. STRUCTURE SHALL MEET AASHTO HS20 AND CASTINGS SHALL MEET AASHTO M306 LOAD RATING, ASSUMING GROUNDWATER ELEVATION AT, OR BELOW, THE OUTLET PIPE INVERT ELEVATION. ENGINEER OF RECORD TO CONFIRM ACTUAL GROUNDWATER ELEVATION.

INSTALLATION NOTES
1. ANY SUB-BASE, BACKFILL DEPTH, AND/OR ANTI-FLOTATION PROVISIONS ARE SITE-SPECIFIC DESIGN CONSIDERATIONS AND SHALL BE SPECIFIED BY ENGINEER OF RECORD.
2. CONTRACTOR TO PROVIDE EQUIPMENT WITH SUFFICIENT LIFTING AND REACH CAPACITY TO LIFT AND SET THE VORTSENTRY HS MANHOLE STRUCTURE (LIFTING CLUTCHES PROVIDED).
3. CONTRACTOR TO INSTALL JOINT SEALANT BETWEEN ALL STRUCTURE SECTIONS AND ASSEMBLE STRUCTURE.
4. CONTRACTOR TO PROVIDE, INSTALL, AND GROUT PIPES. MATCH PIPE INVERTS WITH ELEVATIONS SHOWN.
5. CONTRACTOR TO TAKE APPROPRIATE MEASURES TO ASSURE UNIT IS WATER TIGHT, HOLDING WATER TO FLOWLINE INVERT MINIMUM. IT IS SUGGESTED THAT ALL JOINTS BELOW PIPE INVERTS ARE GROUTED.

CONTECH® ENGINEERED SOLUTIONS LLC
www.ContechES.com
9025 Centre Pointe Dr., Suite 400, West Chester, OH 45069
800-338-1122 513-645-7000 513-645-7993 FAX

VORTSENTRY HS STANDARD DETAIL

STRUCTURE ID	DRAINAGE AREA	MODEL	WQ FLOW RATE
HS–1	PDA–102	HS–60 (OR APPROVED EQUAL)	1.65 CFS
HS–2	PDA–102	HS–60 (OR APPROVED EQUAL)	1.65 CFS
HS–3	PDA–202	HS–60 (OR APPROVED EQUAL)	2.02 CFS
HS–4	PDA–302	HS–60 (OR APPROVED EQUAL)	1.43 CFS

HYDRODYNAMIC SEPARATOR SIZING

NOT FOR CONSTRUCTION
FOR PERMITTING PURPOSES ONLY

Architecture
Engineering
Environmental
Land Surveying

BL Companies

355 Research Parkway
Meriden, CT 06450
(203) 630-1406
(203) 630-2615 Fax

Garden Homes

ROSE EQUITIES
Owner-Builders since 1949

STATE OF CONNECTICUT CHRISTOPHER D. GAGNON No. 27898 LICENSED PROFESSIONAL ENGINEER

THE RESIDENCES AT MAIN
K & K DEVELOPERS, INC.
5085 MAIN STREET
TRUMBULL, CONNECTICUT

REVISIONS

No.	Date	Desc.
1.	6/30/2020	REVISED PER STAFF COMMENTS
2.	8/10/2020	REVISED PER STAFF COMMENTS

Designed	A.T.K.
Drawn	A.T.K.
Reviewed	J.J.S.
Scale	NONE
Project No.	1800513
Date	05/28/2020
CAD File: DN180051301	

Title
DETAILS SHEET

Sheet No.
DN-5

Xref (s): ; BD180051301

8/17/2020, JSOJKA, G:\JOBS18\04\1800513\DWG\DN180051301.DWG.DN-5 24X36.

© 2020 BL COMPANIES, INC. THESE DRAWINGS SHALL NOT BE UTILIZED BY ANY PERSON, FIRM OR CORPORATION WITHOUT THE SPECIFIC WRITTEN PERMISSION OF BL COMPANIES.

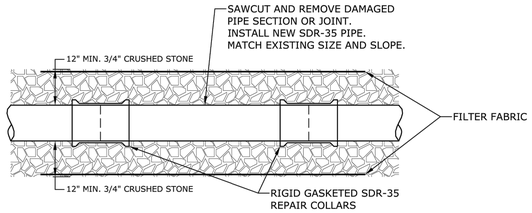

SANITARY SEWER POINT REPAIR
NO SCALE

OFFICE OF THE TOWN ENGINEER TOWN OF TRUMBULL 5866 Main Street (203) 452-5050	
SANITARY SEWER POINT REPAIR DETAIL TRUMBULL, CONNECTICUT	
Scale: xxxxxx	Date: 8/15/2014
Drawn by:	Grid:
Approved by:	Sheet: SS-02

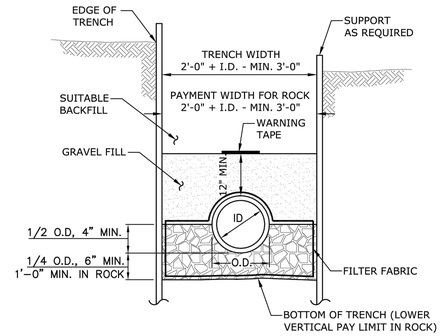

TYPICAL SANITARY SEWER TRENCH SECTION
NO SCALE

OFFICE OF THE TOWN ENGINEER TOWN OF TRUMBULL 5866 Main Street (203) 452-5050	
TYPICAL SANITARY SEWER TRENCH SECTION DETAIL TRUMBULL, CONNECTICUT	
Scale: NTS	Date: 8/15/2014
Drawn by:	Grid:
Approved by:	Sheet: SS-03

STONE ENTRANCE SIGN GATEWAY
N.T.S.

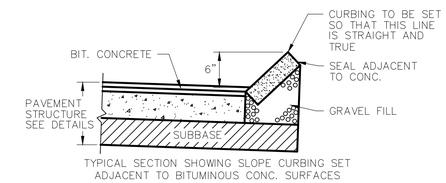

TYPICAL SECTION SHOWING SLOPE CURBING SET ADJACENT TO BITUMINOUS CONC. SURFACES

MOUNTABLE GRANITE SLOPE CURBING
N.T.S. ZPC-039

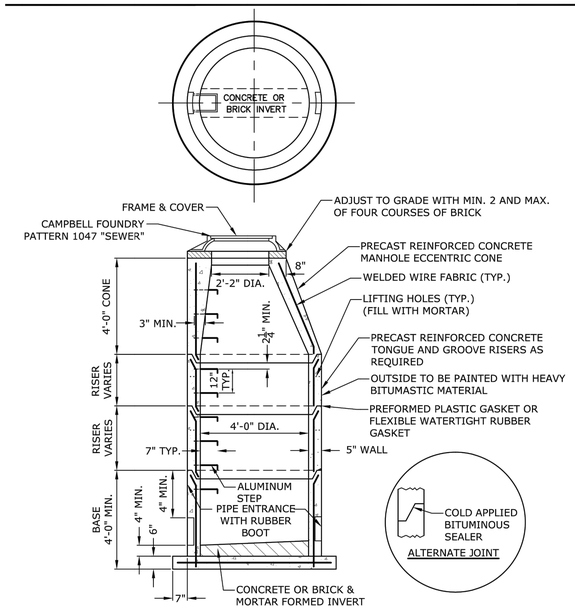

5' OR 6' DIA. PRECAST BASES MAY BE USED WHEN REQUIRED DUE TO SIZE OR NUMBER OF PIPES AT THE MANHOLE.
PRECAST REDUCERS WILL BE PLACED ABOVE THE 5' & 6' BASES AS DIRECTED BY THE ENGINEER.
WALL THICKNESS TO INCREASE 1" FOR EACH 1' OF INSIDE DIAMETER INCREASE.

PRECAST SANITARY MANHOLE
NO SCALE

OFFICE OF THE TOWN ENGINEER TOWN OF TRUMBULL 5866 Main Street (203) 452-5050	
PRECAST SANITARY MANHOLE DETAIL TRUMBULL, CONNECTICUT	
Scale: NTS	Date: 8/15/2014
Drawn by:	Grid:
Approved by:	Sheet: SS-05

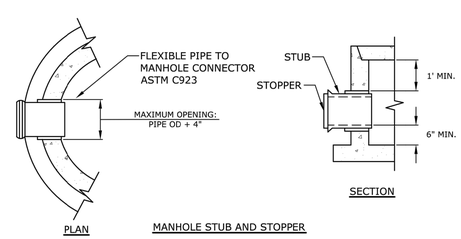

MANHOLE STUB AND STOPPER

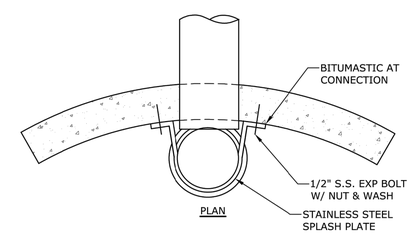

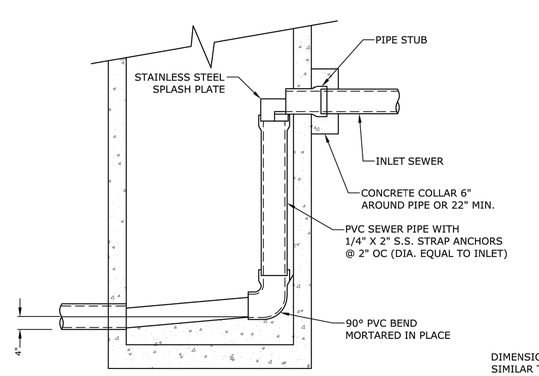

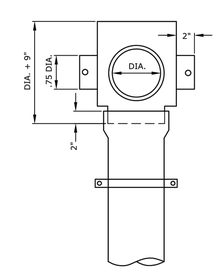

SHIELD FOR DROP MANHOLE

DIMENSIONS OF DROP INLET ARE SIMILAR TO THAT OF THE TYPICAL MANHOLE EXCEPT AS NOTED OTHERWISE

INSIDE DROP MANHOLE
NO SCALE

OFFICE OF THE TOWN ENGINEER TOWN OF TRUMBULL 5866 Main Street (203) 452-5050	
INSIDE DROP MANHOLE DETAIL TRUMBULL, CONNECTICUT	
Scale: NTS	Date: 8/15/2014
Drawn by:	Grid:
Approved by:	Sheet: SW-05

NOT FOR CONSTRUCTION
FOR PERMITTING PURPOSES ONLY

Aug 21, 2014-10:20am Plotted By: jadm
Dwg: S:\Rlevel Doc's\17017\0000\Civil\Town of Trumbull Standard Details\Details\Sewer\SW-05.dwg

© 2020 BL COMPANIES, INC. THESE DRAWINGS SHALL NOT BE UTILIZED BY ANY PERSON, FIRM OR CORPORATION WITHOUT THE SPECIFIC WRITTEN PERMISSION OF BL COMPANIES.

8/17/2020, JSD,JKA, G:\CADB\18\GA\18800513\DWG\DN\18800513D1.DWG,24x36,JKA

Architecture
Engineering
Environmental
Land Surveying
BL Companies
355 Research Parkway
Meriden, CT 06450
(203) 630-1406
(203) 630-2615 Fax

Garden Homes

ROSE EQUITIES
Owner-Builders since 1949

STATE OF CONNECTICUT
CHRISTOPHER D. GAUDIO
No. 27798
LICENSED
PROFESSIONAL ENGINEER

THE RESIDENCES AT MAIN
K & K DEVELOPERS, INC.
5085 MAIN STREET
TRUMBULL, CONNECTICUT

REVISIONS No.	Date	Desc.
1.	6/30/2020	REVISED PER STAFF COMMENTS
2.	8/10/2020	REVISED PER STAFF COMMENTS

Designed	A.T.K.
Drawn	A.T.K.
Reviewed	J.J.S.
Scale	NONE
Project No.	1800513
Date	05/28/2020
CAD File: DN1800513D1	

Title
DETAILS SHEET

Sheet No.
DN-6

Xref (s): : BD1800513D1

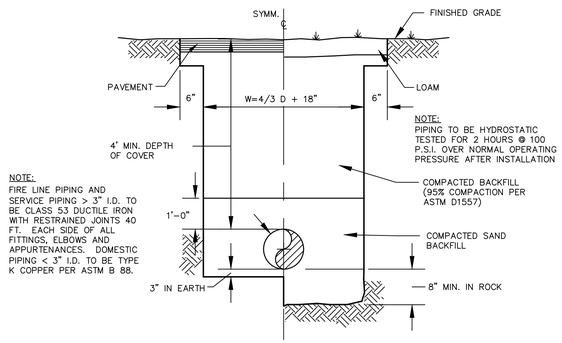

TYPICAL WATER MAIN AND SERVICE TRENCH DETAIL

N.T.S.

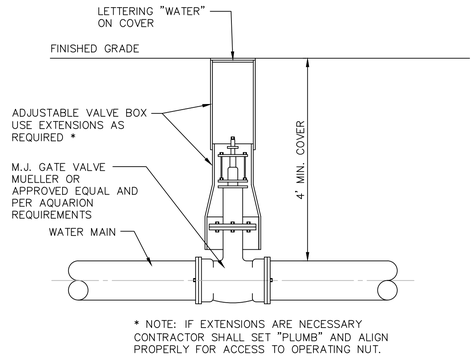

* NOTE: IF EXTENSIONS ARE NECESSARY CONTRACTOR SHALL SET "PLUMB" AND ALIGN PROPERLY FOR ACCESS TO OPERATING NUT.

TYPICAL GATE VALVE AND VALVE BOX DETAIL

N.T.S. BLWD-002

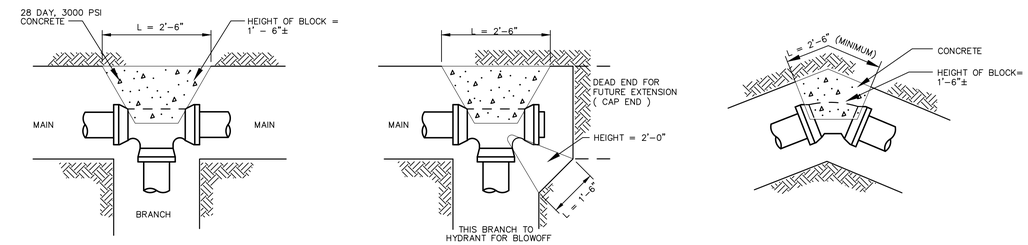

THRUST BLOCKS FOR WATER LINES

N.T.S. BLWD-001

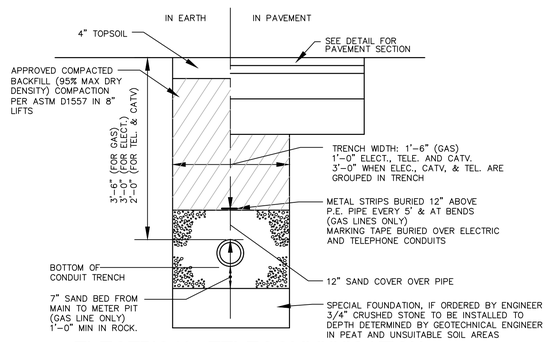

ELECTRICAL, TELECOMMUNICATION AND GAS TRENCH DETAIL

N.T.S.

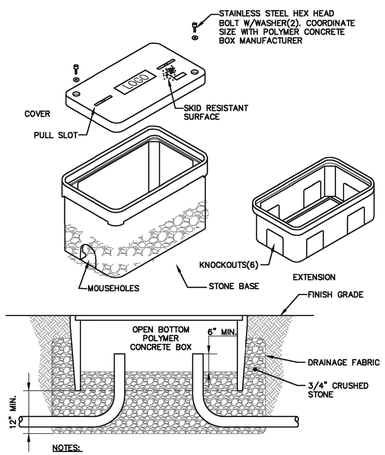

NOTES:

1. PROVIDE 1"x4" BELL PULL SLOT FOR EACH HANDHOLE.
2. COVERING RING AND BOX SHALL BE MADE OF SAME MATERIAL.
3. COORDINATE COVER AND FRAME COLOR OF HANDHOLE WITH ARCHITECT.
4. PROVIDE TIER 15 MINIMUM RATED BOX AND COVER.

PULL BOX DETAIL

N.T.S.

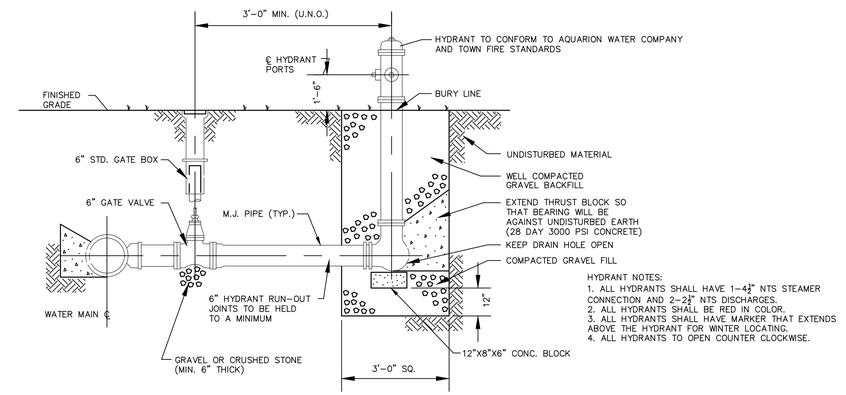

HYDRANT NOTES:
1. ALL HYDRANTS SHALL HAVE 1-4½" NTS STEAMER CONNECTION AND 2-2½" NTS DISCHARGES.
2. ALL HYDRANTS SHALL BE RED IN COLOR.
3. ALL HYDRANTS SHALL HAVE MARKER THAT EXTENDS ABOVE THE HYDRANT FOR WINTER LOCATING.
4. ALL HYDRANTS TO OPEN COUNTER CLOCKWISE.

HYDRANT DETAIL WITH GATE BOX

N.T.S. BLWD-003

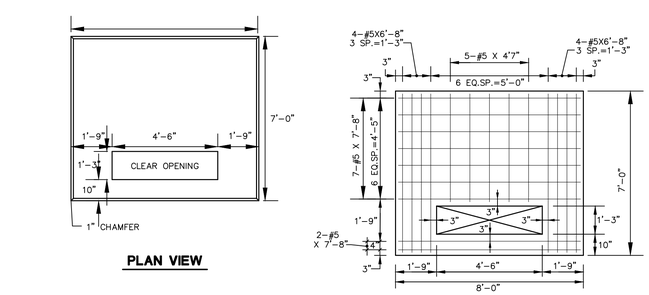

PLAN VIEW

PLAN OF REINFORCING

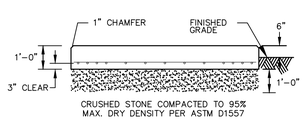

SECTION

NOTE: CONFIRM SIZE WITH UNITED ILLUMINATING COMPANY FOR REQUIRED CONFIGURATION OF PAD PRIOR TO CONSTRUCTION

TRANSFORMER PAD

N.T.S. BLLE-001

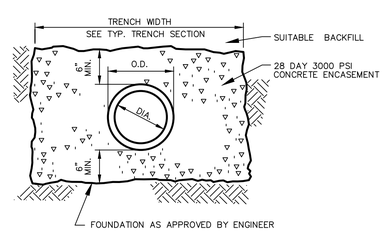

CONCRETE PROTECTION FOR PIPING

N.T.S. BLSS-011

GENERAL NOTES

1. STRIP ALL VEGETATION AND ORGANIC SOIL FROM THE WALL AND GRID ALIGNMENT.
2. BENCH CUT ALL EXCAVATED SLOPES.
3. DO NOT OVER EXCAVATE UNLESS DIRECTED BY SITE SOIL ENGINEER TO REMOVE UNSUITABLE SOIL.
4. SITE SOIL ENGINEER SHALL VERIFY FOUNDATION SOILS AS BEING COMPETENT PER THE DESIGN STANDARDS AND PARAMETERS.
5. LEVELING PAD SHALL CONSIST OF 3/4" FOUNDATION STONE, MINIMUM 6" THICK, OR 3,000 PSI CONCRETE.
6. CONTRACTOR MAY OPT FOR A CONCRETE FOOTING. CONCRETE FOOTING SHALL BE UNREINFORCED, DEPTH OF CONCRETE TO BE A MINIMUM THICKNESS OF 6".
7. MINIMUM EMBEDMENT OF WALL BELOW FINISH GRADE SHALL BE 16" FOR WALL HEIGHTS FROM 4' AND UP TO 10', 8" FOR HEIGHTS BELOW 4' UNLESS SHOWN DIFFERENTLY.
8. FOLLOW APPLICABLE PROVISIONS OF THE MANUFACTURERS INSTALLATION INSTRUCTIONS AND WRITTEN SPECIFICATIONS.
9. WHERE DRAIN PIPE IS USED, PROVIDE OUTLETS AS SHOWN ON WALL ELEVATIONS.
10. COMPACTION TESTS SHALL BE TAKEN AS THE WALL IS INSTALLED. THE MINIMUM NUMBER OF TESTS SHALL BE DETERMINED BY THE SITE SOILS ENGINEER, OR AS INDICATED IN THE SPECIFICATION.
11. COMPACTION SHALL BE 95% OF MAXIMUM DRY DENSITY PER ASTM D-1557.
12. GEOGRID SHALL BE PER BLOCK MANUFACTURER'S DESIGN ON SHOP DRAWINGS.
13. PULL GEOGRID TIGHT PRIOR TO BACK FILLING. LENGTH OF GEOGRID SHALL BE MEASURED FROM FRONT OF SEGMENTAL CONCRETE UNITS.
14. PROVIDE LATERAL DRAINAGE SWALES TO DIRECT FLOWS AROUND THE ENDS OF THE WALL.
15. ESTABLISH TURF AS SOON AS THE WALL IS COMPLETED.
16. FINAL WALL ALIGNMENT SHALL BE LOCATED IN THE FIELD.
17. REINFORCED BACK FILL REQUIREMENTS FOR THE SEGMENTAL CONCRETE RETAINING WALL SHALL CONFORM TO THE FOLLOWING SPECIFICATIONS:

SIEVE SIZE	PERCENT PASSING REINFORCED BACK FILL
2 INCH	100
NO. 4	40–85
NO. 10	25–75
NO. 40	15–50
NO. 100	10–40
NO. 200	4–12

PLASTICITY INDEX (PI) LESS THAN OR EQUAL TO 10 AND A LIQUID LIMIT LESS THAN OR EQUAL TO 40. REINFORCED BACK FILL SHALL BE PLACED AND COMPACTED IN LIFTS NOT EXCEEDING 10 INCHES. REINFORCED BACK FILL SHALL BE COMPACTED TO 95 PERCENT OF THE MAXIMUM DENSITY AS DETERMINED BY ASTM-1557. THE MOISTURE CONTENT OF THE BACK FILL MATERIAL PRIOR TO AND DURING COMPACTION SHALL BE WITHIN 2 PERCENTAGE POINTS OF DRY OPTIMUM.

IF CONDITIONS ARE DIFFERENT THAN THOSE STATED IN THESE DRAWINGS AND SPECIFICATIONS, THE CONTRACTOR MUST CONTACT THE ENGINEER PRIOR TO PROCEEDING WITH THE CONSTRUCTION OF THE WALL.

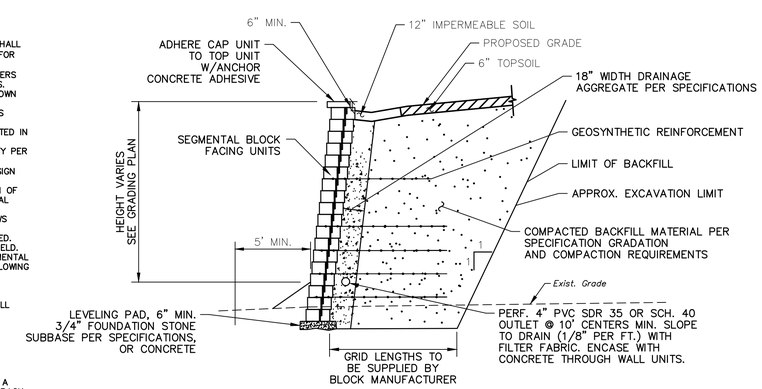

NOTE: BLOCK MANUFACTURER TO SUBMIT SHOP DRAWINGS AND CALCULATIONS FOR RETAINING WALLS PRIOR TO CONSTRUCTION PREPARED BY A CT LICENSED PROFESSIONAL ENGINEER

TYPICAL RETAINING WALL SECTION

N.T.S.

NOT FOR CONSTRUCTION
FOR PERMITTING PURPOSES ONLY

© 2020 BL COMPANIES, INC. THESE DRAWINGS SHALL NOT BE UTILIZED BY ANY PERSON, FIRM OR CORPORATION WITHOUT THE SPECIFIC WRITTEN PERMISSION OF BL COMPANIES.

Architecture
Engineering
Environmental
Land Surveying
BL Companies
355 Research Parkway
Meriden, CT 06450
(203) 630-1406
(203) 630-2615 Fax

Garden Homes

ROSE EQUITIES
Owner-Builders since 1949

STATE OF CONNECTICUT
CHRISTOPHER B. GAUDIO
No. 27795
LICENSED
PROFESSIONAL ENGINEER

THE RESIDENCES AT MAIN
K & K DEVELOPERS, INC.
5085 MAIN STREET
TRUMBULL, CONNECTICUT

REVISIONS		
No.	Date	Desc.
1.	6/30/2020	REVISED PER STAFF COMMENTS
2.	8/10/2020	REVISED PER STAFF COMMENTS

Designed	A.T.K.
Drawn	A.T.K.
Reviewed	J.J.S.
Scale	NONE
Project No.	1800513
Date	05/28/2020
CAD File: DN180051301	

Title
DETAILS SHEET

Sheet No.
DN-7

Xref (s) : BD180051301

8/17/2020 JSCUKA G:\CADD\18\DAN\180051301\DWG\DN180051301 DWG.DWG 7 JACKA

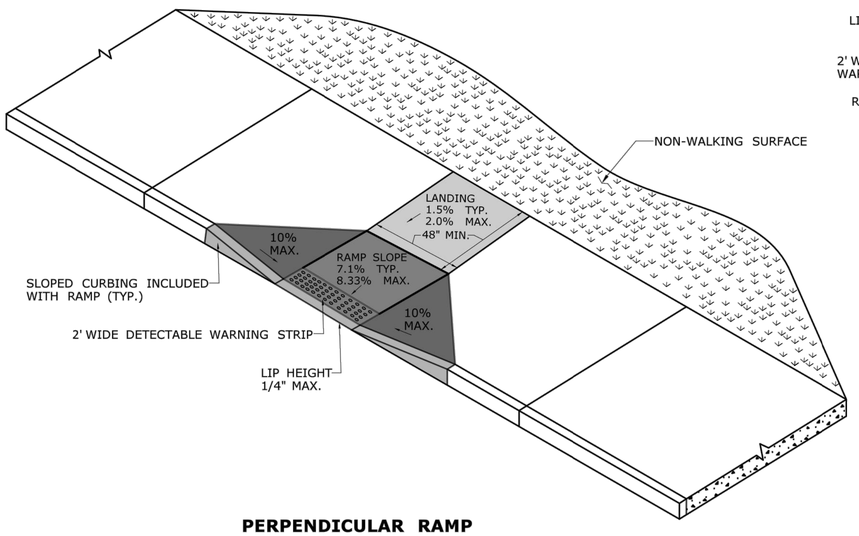

PERPENDICULAR RAMP
WITH 48" BY-PASS
(TYPE 8)

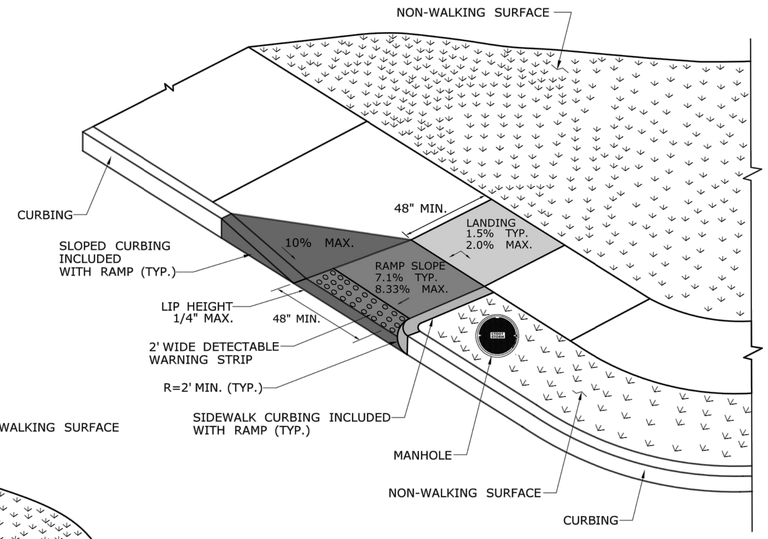

PERPENDICULAR RAMP
WITH NON-WALKING SURFACE
(TYPE 18 LEFT)

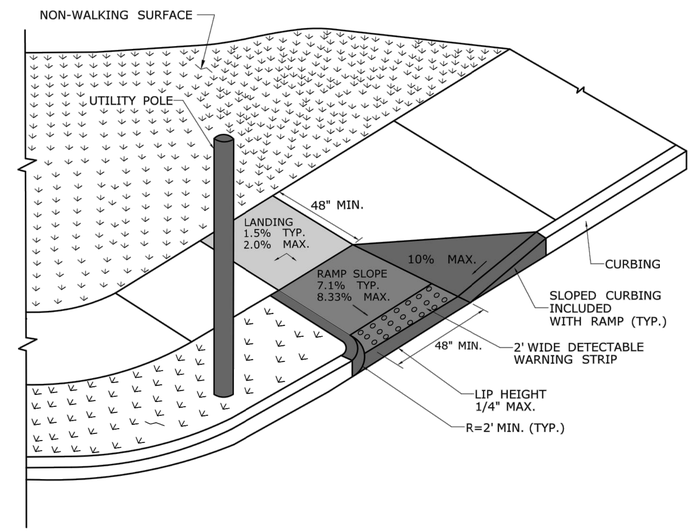

PERPENDICULAR RAMP
WITH NON-WALKING SURFACE
(TYPE 18 RIGHT)

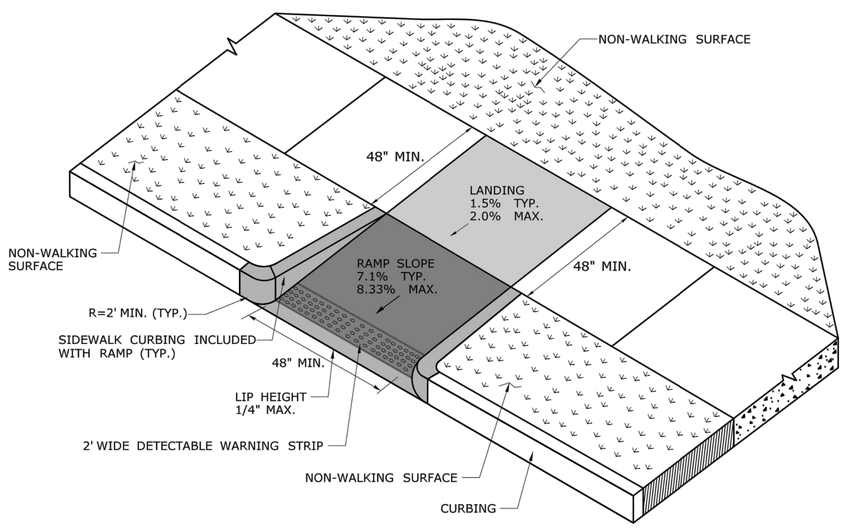

PERPENDICULAR RAMP
WITH NON-WALKING SURFACE
(TYPE 13)

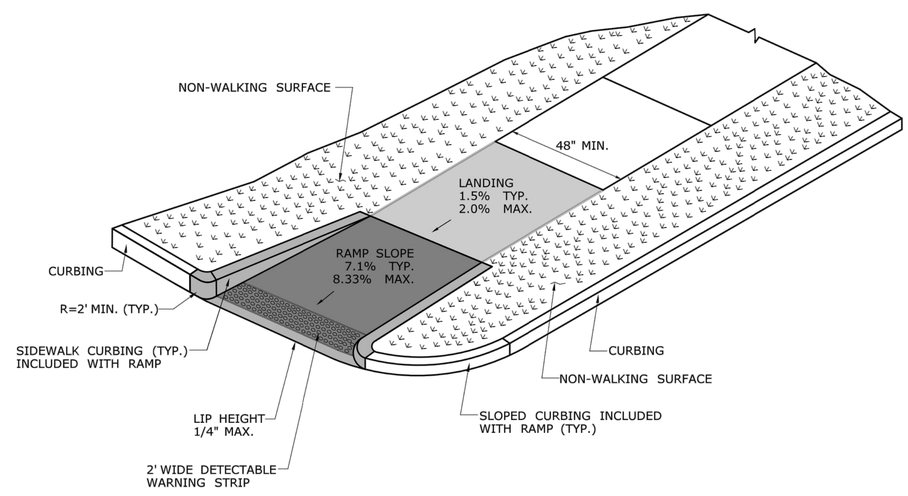

SINGLE DIRECTION - RETURN CURB
WITH NON-WALKING SURFACE
(TYPE 16)

NOT FOR CONSTRUCTION
FOR PERMITTING PURPOSES ONLY

Architecture
Engineering
Environmental
Land Surveying

BL Companies

355 Research Parkway
Meriden, CT 06450
(203) 630-1406
(203) 630-2615 Fax

Garden Homes

ROSE EQUITIES
Owner-Builders since 1949

STATE OF CONNECTICUT
CHRISTOPHER R. GAUDIO
No. 27798
LICENSED
PROFESSIONAL ENGINEER

THE RESIDENCES AT MAIN
K & K DEVELOPERS, INC.
5085 MAIN STREET
TRUMBULL, CONNECTICUT

REVISIONS

No.	Date	Desc.
1.	6/30/2020	REVISED PER STAFF COMMENTS
2.	8/10/2020	REVISED PER STAFF COMMENTS

Designed	A.T.K.
Drawn	A.T.K.
Reviewed	J.J.S.
Scale	NONE
Project No.	1800513
Date	05/28/2020
CAD File: DN180051301	

Title

DETAILS SHEET

Sheet No.

DN-8

Xref (s) : BD180051301

8/17/2020, JED,JKA, J:\K-K\2018\18-KA\180051\SITE\DWG\DN180051301.DWG,DN-8 24X36,

© 2020 BL COMPANIES, INC. THESE DRAWINGS SHALL NOT BE UTILIZED BY ANY PERSON, FIRM OR CORPORATION WITHOUT THE SPECIFIC WRITTEN PERMISSION OF BL COMPANIES.

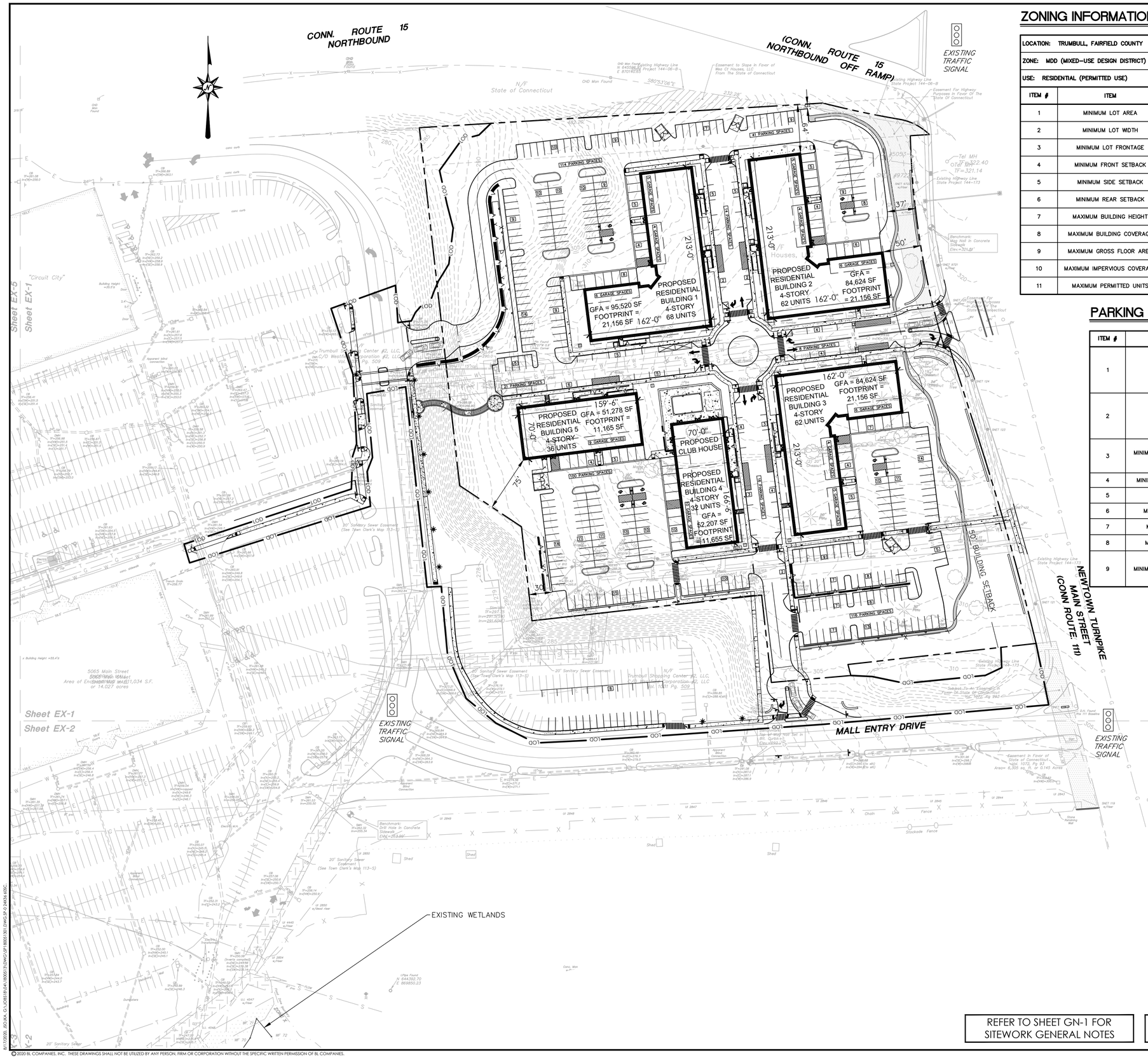

ZONING INFORMATION

LOCATION: TRUMBULL, FAIRFIELD COUNTY

ZONE: MDD (MIXED–USE DESIGN DISTRICT)

USE: RESIDENTIAL (PERMITTED USE)

ITEM #	ITEM	REQUIREMENTS	PROPOSED – MALL	PROPOSED – RESID.	VARIANCE
1	MINIMUM LOT AREA	7 ACRES	3,255,551 S.F. (77.737 AC.)	453,996 S.F. (10.422 AC.)	NO
2	MINIMUM LOT WIDTH	NONE REQUIRED	1640 FEET	643 FEET	NO
3	MINIMUM LOT FRONTAGE	NONE REQUIRED	226.97 FT (MAIN)	697 FEET (MAIN)	NO
4	MINIMUM FRONT SETBACK	50 FEET	1001 FT (MADISON)	50 FEET	NO
5	MINIMUM SIDE SETBACK	0 FEET	52.7 FT (LAF)	64 FEET	NO
6	MINIMUM REAR SETBACK	0 FEET	NONE	75 FEET	NO
7	MAXIMUM BUILDING HEIGHT	65 FEET	< 65 FEET	< 65 FEET	NO
8	MAXIMUM BUILDING COVERAGE	50 PERCENT	20.96 PERCENT	19 PERCENT	NO
9	MAXIMUM GROSS FLOOR AREA	100 PERCENT	42.92 PERCENT	81.1 PERCENT	NO
10	MAXIMUM IMPERVIOUS COVERAGE	85 PERCENT	< 85 PERCENT	58 PERCENT	NO
11	MAXIMUM PERMITTED UNITS	260 UNITS	0	260 UNITS	NO

PARKING INFORMATION

ITEM #	ITEM	REQUIREMENTS	PROPOSED	VARIANCE
1	BUILDING SIZE	NONE REQUIRED	RES. – 368,253 SF MALL–1,089,564 SF	NO
2	PARKING REQUIRED	MULTI–FAMILY HOMES: 1.9 SPACES PER UNIT BEDROOMS = 260 260 X 1.9 = 494 SPACES RETAIL: 1,089,564 / 250=4,359 SPACES	RESIDENTIAL: 428 SURFACE PARKING 64 GARAGE PARKING TOTAL = 493 SPACES RETAIL: 4,408 SPACES	NO
3	MINIMUM HANDICAPPED PARKING SPACES REQUIRED	9 TOTAL ACCESSIBLE SPACES (MINIMUM OF 2 VAN ACCESSIBLE)	TOTAL = 10 SPACES	NO
4	MINIMUM PARKING DIMENSIONS	9 FEET X 18 FEET	9 FEET X 18 FEET	NO
5	MINIMUM AISLE WIDTH	24 FEET – 2–WAY 12 FEET – 1–WAY	24 FEET – 2–WAY	NO
6	MINIMUM FRONT SETBACK	NONE	37 FEET	NO
7	MINIMUM SIDE SETBACK	NONE	6 FEET	NO
8	MINIMUM REAR SETBACK	NONE	30 FEET	NO
9	MINIMUM INTERIOR LANDSCAPING	ONE TREE PER 20 OFF–STREET PARKING SPACES NOT LOCATED WITHIN A PARKING STRUCTURE, 429 SPACES (NOT INCLUDING GARAGE SPACES) = 22 TREES	> 22 INTERIOR TREES	NO

REFER TO SHEET GN-1 FOR SITEWORK GENERAL NOTES

NOT FOR CONSTRUCTION FOR PERMITTING PURPOSES ONLY

GRAPHIC SCALE
60 30 0 60
SCALE IN FEET

Architecture Engineering Environmental Land Surveying
BL Companies
355 Research Parkway
Meriden, CT 06450
(203) 630-1406
(203) 630-2615 Fax

Garden Homes

ROSE EQUITIES
Owner-Builders since 1949

STATE OF CONNECTICUT CHRISTOPHER B. GAUDIO No. 27798 LICENSED PROFESSIONAL ENGINEER

THE RESIDENCES AT MAIN
K & K DEVELOPERS, INC.
5085 MAIN STREET
TRUMBULL, CONNECTICUT

REVISIONS
No. Date Desc.
1. 6/30/2020 REVISED PER STAFF COMMENTS
2. 8/10/2020 REVISED PER STAFF COMMENTS

Designed	A.T.K.
Drawn	A.T.K.
Reviewed	J.J.S.
Scale	1"=60'
Project No.	1800513
Date	05/28/2020
CAD File: SP180051301	

Title
OVERALL SITE PLAN

Sheet No.
SP-0

Xref (s): BD180051301 ; XC180051301 ; XY180051302 ; XC180051302 ; XX05C13801 ; XY180051301 ; XC180051301

BY PTRIBE, BGDAN, GVLADES RYAN LEBOSS13\DWGs\SP180051301.DWG-SP-0 24X36 ARC

© 2020 BL COMPANIES, INC. THESE DRAWINGS SHALL NOT BE UTILIZED BY ANY PERSON, FIRM OR CORPORATION WITHOUT THE SPECIFIC WRITTEN PERMISSION OF BL COMPANIES.

SIGN LEGEND

SIGN NO.	CT-DOT NO. OR MUTCD NO.	LEGEND
A	31-0552	STOP 30"
B	31-0629	HANDICAPPED PARKING FINE AND IMPRISONMENT
C	31-0648	VAN ACCESSIBLE
D	31-1619	NO LEFT TURN — BACKGROUND – SILVER; LEGEND – BLACK; CIRCLE & DIAGONAL – RED
E	31-0523	YIELD — BACKGROUND – SILVER; LEGEND – BLACK
F	41-4672 41-4670	TRAFFIC CIRCLE
G	41-4811	
H	31-1109	DO NOT ENTER — BACKGROUND – SILVER; LEGEND – SILVER; SIGN FACE – RED
I	31-1177	(R) ONE WAY

NOTE: HANDICAPPED SIGNS TO BE INSTALLED IN PIPE BOLLARDS (SEE DETAIL). ALL HANDICAP SIGNAGE TO CONFORM TO LATEST BUILDING CODE.

SITE LEGEND

- LOD — LIMIT OF DISTURBANCE
- PROPOSED CURB
- PROPOSED RETAINING WALL
- X — PROPOSED CHAIN LINK FENCE
- PROPOSED GUIDE RAIL
- PROPOSED CONCRETE
- PROPOSED SAWCUT LINE

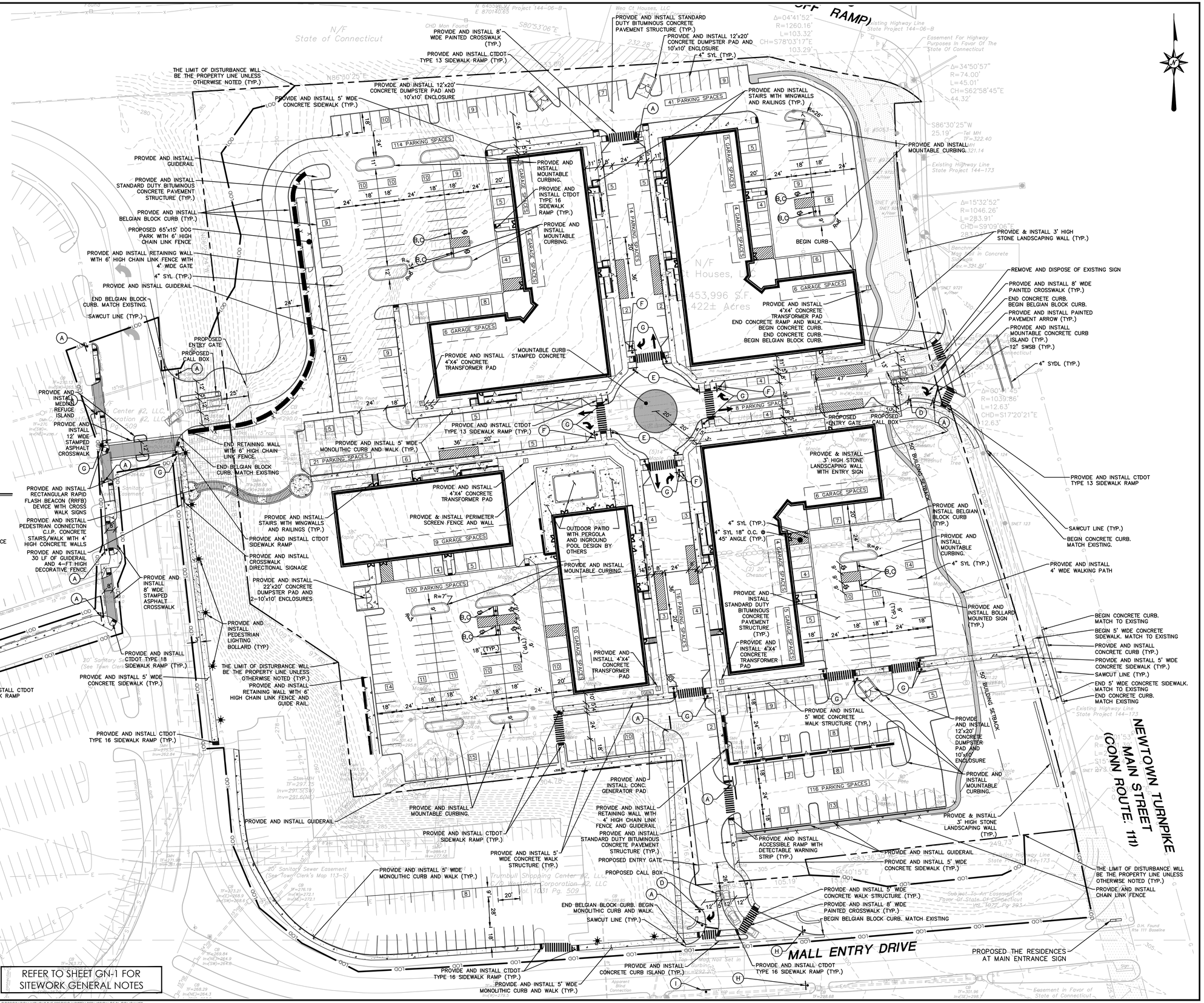

NOT FOR CONSTRUCTION FOR PERMITTING PURPOSES ONLY

REFER TO SHEET GN-1 FOR SITEWORK GENERAL NOTES

© 2020 BL COMPANIES, INC. THESE DRAWINGS SHALL NOT BE UTILIZED BY ANY PERSON, FIRM OR CORPORATION WITHOUT THE SPECIFIC WRITTEN PERMISSION OF BL COMPANIES.

Architecture Engineering Environmental Land Surveying
BL Companies
355 Research Parkway
Meriden, CT 06450
(203) 630-1406
(203) 630-2615 Fax

Garden Homes
ROSE EQUITIES
Owner-Builders since 1949

STATE OF CONNECTICUT CHRISTOPHER B. GAUDIO No. 28798 LICENSED PROFESSIONAL ENGINEER

THE RESIDENCES AT MAIN
K & K DEVELOPERS, INC.
5085 MAIN STREET
TRUMBULL, CONNECTICUT

REVISIONS

No.	Date	Desc.
1.	6/30/2020	REVISED PER STAFF COMMENTS
2.	8/10/2020	REVISED PER STAFF COMMENTS

Designed	A.T.K.
Drawn	A.T.K.
Reviewed	J.J.S.
Scale	1"=40'
Project No.	1800513
Date	05/28/2020
CAD File: SP180051301	

Title
SITE PLAN

Sheet No.
SP-1

Xref (s): BD180051301 ; XT180051301 ; XC180051301 ; XV0C13380 1 ; XX180051302 ; XL180051301

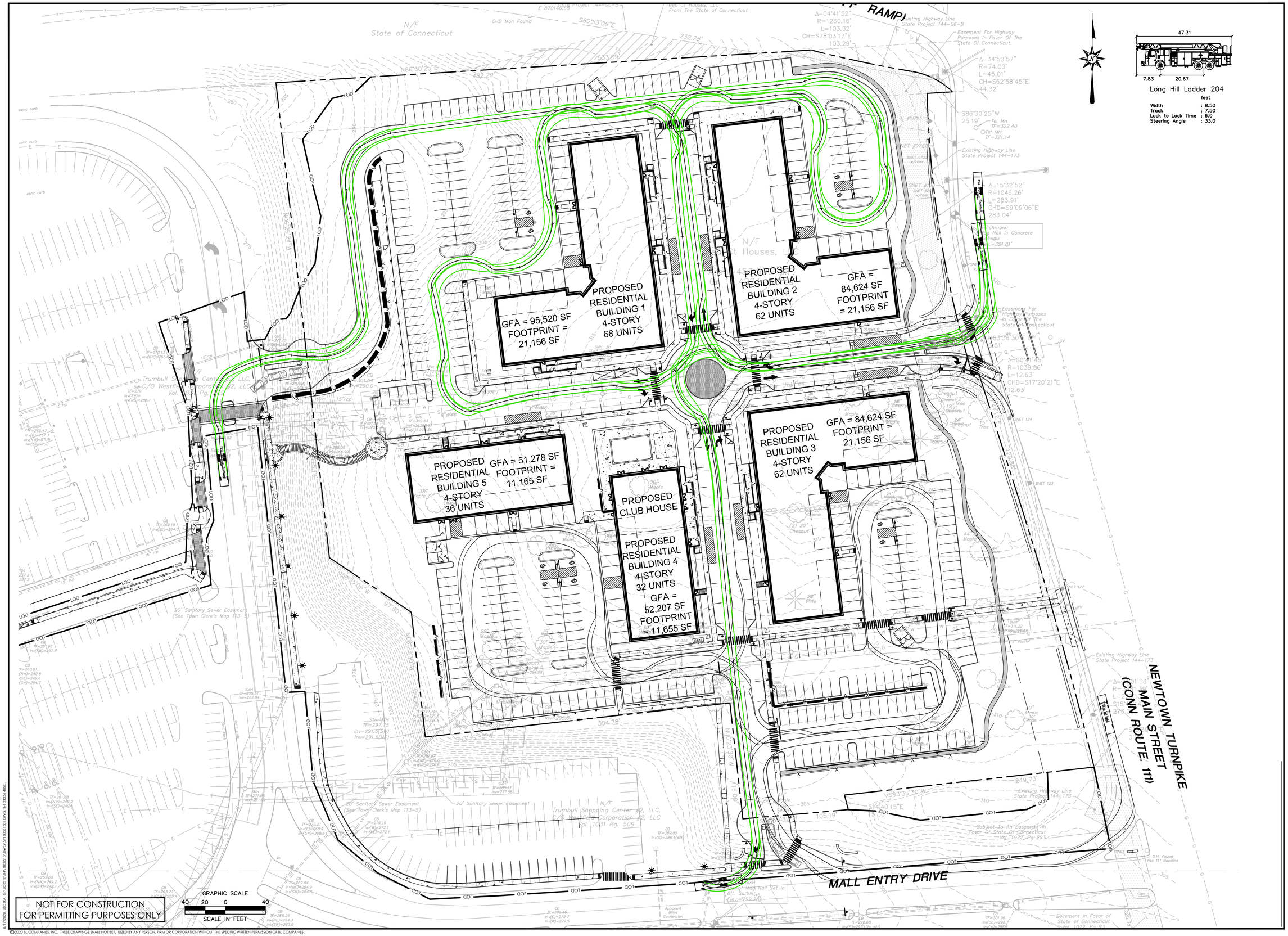

© 2020 BL COMPANIES, INC. THESE DRAWINGS SHALL NOT BE UTILIZED BY ANY PERSON, FIRM OR CORPORATION WITHOUT THE SPECIFIC WRITTEN PERMISSION OF BL COMPANIES.

BY/TZ/DB: JSD/JAL; G:\CADD\BVDA\18005\DWG\SP18005301.DWG;TT-1 24X36-ARC

Xref (s) : BD180051301 ; XY180051301 ; XC180051301 ; XY05C133801 ; XY180051302 ; XC180051302 ; XI180051301

Architecture
Engineering
Environmental
Land Surveying
BL Companies
355 Research Parkway
Meriden, CT 06450
(203) 630-1406
(203) 630-2615 Fax

Garden Homes

ROSE EQUITIES
Owner-Builders since 1949

STATE OF CONNECTICUT
CHRISTOPHER B. GAUDIO
No. 28798
LICENSED
PROFESSIONAL ENGINEER

THE RESIDENCES AT MAIN
K & K DEVELOPERS, INC.
5085 MAIN STREET
TRUMBULL, CONNECTICUT

REVISIONS

No.	Date	Desc.
1.	6/30/2020	REVISED PER STAFF COMMENTS
2.	8/10/2020	REVISED PER STAFF COMMENTS

Designed	A.T.K.
Drawn	J.S.D.
Reviewed	J.J.S.
Scale	1"=40'
Project No.	1800513
Date	05/28/2020
CAD File: SP180051301	

Title

TRUCK TURNING PLAN

Sheet No.

TT-1

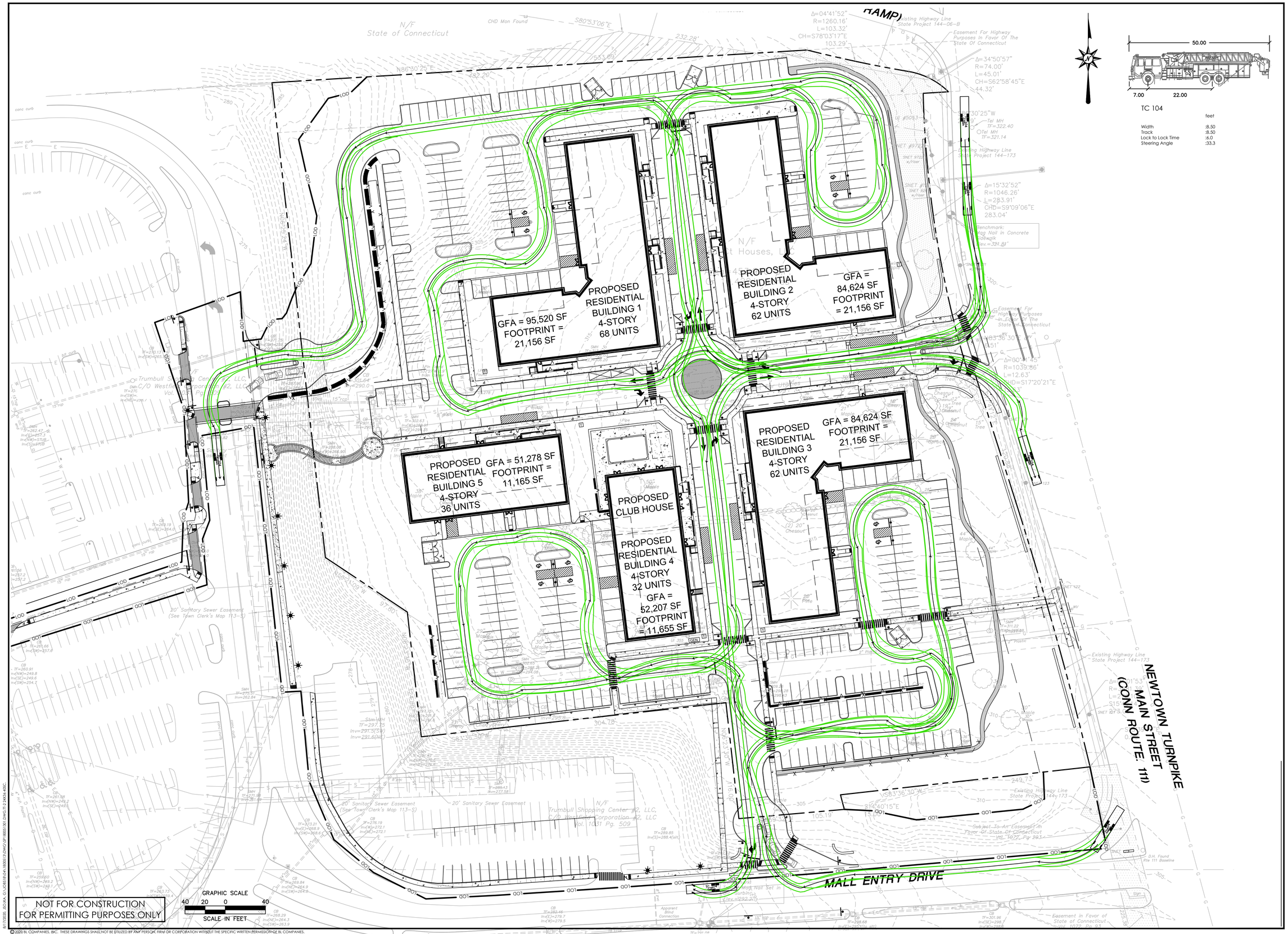

TC 104

	feet
Width	:8.50
Track	:8.50
Lock to Lock Time	:6.0
Steering Angle	:33.3

Architecture
Engineering
Environmental
Land Surveying

BL Companies

355 Research Parkway
Meriden, CT 06450
(203) 630-1406
(203) 630-2615 Fax

Garden Homes

ROSE EQUITIES
Owner-Builders since 1949

STATE OF CONNECTICUT
CHRISTOPHER B. GAUDIO
No. 28798
LICENSED
PROFESSIONAL ENGINEER

THE RESIDENCES AT MAIN
K & K DEVELOPERS, INC.
5085 MAIN STREET
TRUMBULL, CONNECTICUT

No.	Date	Desc.
1.	6/30/2020	REVISED PER STAFF COMMENTS
2.	8/10/2020	REVISED PER STAFF COMMENTS

REVISIONS

Designed	A.T.K.
Drawn	J.S.D.
Reviewed	J.J.S.
Scale	1"=40'
Project No.	1800513
Date	05/28/2020
CAD File: SP180051301	

Title

TRUCK TURNING PLAN

Sheet No.

TT-2

Xref (s) : BD180051301 ; XC180051301 ; XY180051301 ; XY05C133801 ; XY180051302 ; XC180051302 ; XI180051301

BY 172726 JSD,JKA, G:\CADD\BVCAD\180051301\DWG\SP180051301.DWG,TT-2 24X36 ARCH

© 2020 BL COMPANIES, INC. THESE DRAWINGS SHALL NOT BE UTILIZED BY ANY PERSON, FIRM OR CORPORATION WITHOUT THE SPECIFIC WRITTEN PERMISSION OF BL COMPANIES.

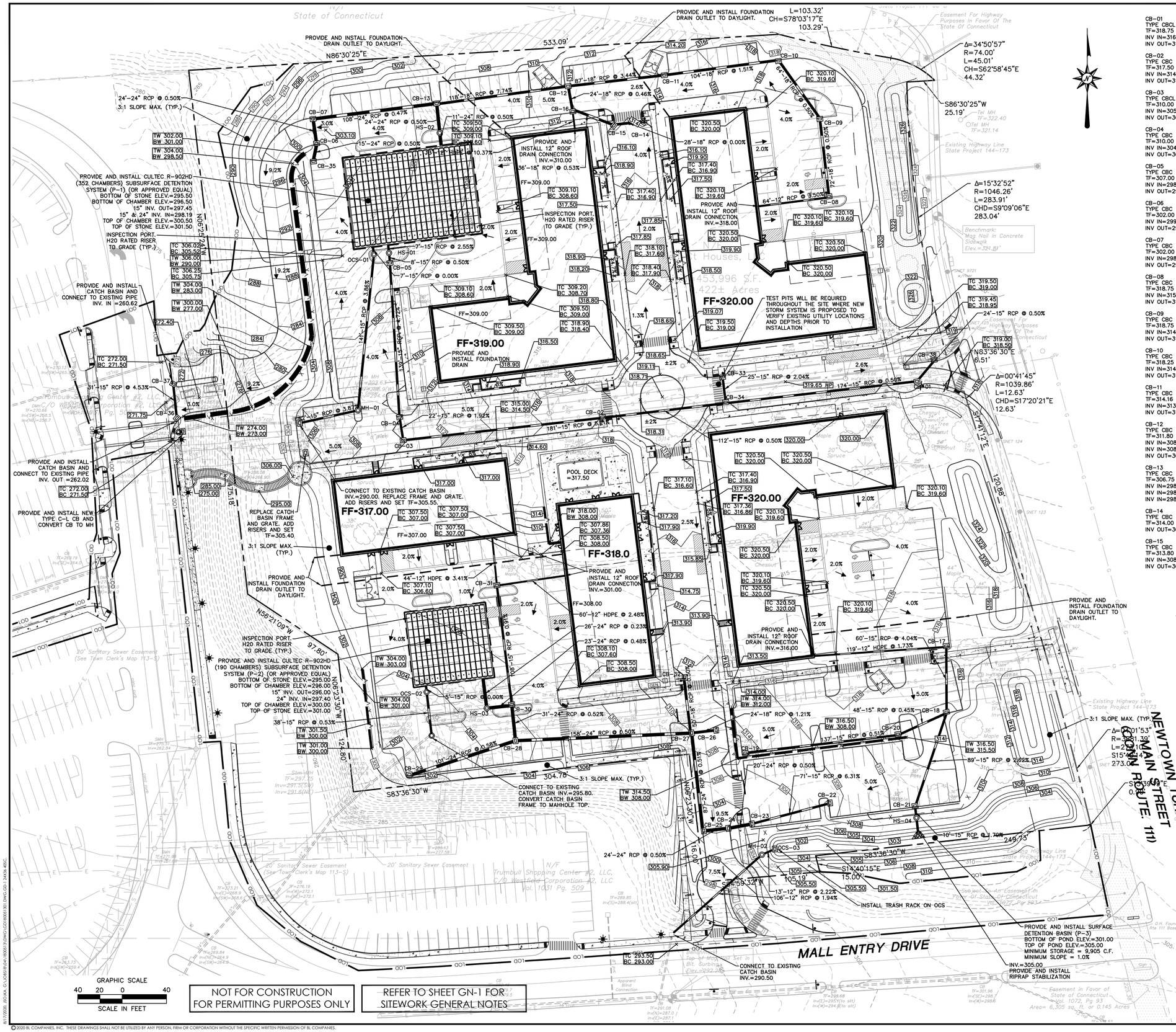

NOT FOR CONSTRUCTION FOR PERMITTING PURPOSES ONLY

REFER TO SHEET GN-1 FOR SITEWORK GENERAL NOTES

CB-01
TYPE CBCL
TF=318.75
INV IN=316.25(NE)
INV OUT=316.25(W)

CB-02
TYPE CBC
TF=317.50
INV IN=314.82(E)
INV OUT=314.82(W)

CB-03
TYPE CBCL
TF=310.00
INV IN=305.40(E)
INV OUT=305.40(N)

CB-04
TYPE CBC
TF=310.00
INV IN=304.98(S)
INV OUT=304.98(N)

CB-05
TYPE CBC
TF=307.00
INV IN=298.41(S)
INV OUT=298.41(N)

CB-06
TYPE CBC
TF=302.00
INV IN=299.00(S)
INV OUT=299.00(N)

CB-07
TYPE CBC
TF=302.00
INV IN=298.88(S)
INV OUT=298.88(E)

CB-08
TYPE CBC
TF=318.75
INV IN=315.75(W)
INV OUT=315.25(N)

CB-09
TYPE CBC
TF=318.75
INV IN=314.89(S)
INV OUT=314.89(NW)

CB-10
TYPE CBC
TF=318.25
INV IN=314.57(SE)
INV OUT=314.57(W)

CB-11
TYPE CBC
TF=314.16
INV IN=313.00(E)
INV OUT=311.00(W)

CB-12
TYPE CBC
TF=311.80
INV IN=308.00(E)
INV IN=308.00(S)
INV OUT=308.00(W)

CB-13
TYPE CBC
TF=306.75
INV IN=298.37(W)
INV IN=298.87(E)
INV IN=298.25(S)

CB-14
TYPE CBC
TF=314.00
INV OUT=308.30(W)

CB-15
TYPE CBC
TF=313.80
INV IN=308.30(E)
INV OUT=308.30(W)

CB-16
TYPE CBC
TF=311.80
INV IN=308.11(E)
INV IN=308.61(S)
INV OUT=308.11(N)

CB-17
TYPE CBC
TF=315.75
INV IN=313.93(W)
INV OUT=313.00(S)

CB-18
TYPE CBC
TF=316.00
INV IN=310.59(SW)
INV IN=310.59(N)
INV OUT=310.59(S)

CB-19
TYPE CBC
TF=313.75
INV OUT=311.50(E)

CB-20
TYPE CBC
TF=315.75
INV IN=310.81(W)
INV OUT=310.81(NE)

CB-21
TYPE CBCL
TF=310.19
INV IN=308.25(N)
INV OUT=306.00(S)

CB-22
TYPE CBC
TF=307.50
INV OUT=304.50(W)

CB-23 (1)
TYPE CBC
TF=304.50

CB-23
TYPE CBC
TF=305.81
INV IN=300.00(E)
INV OUT=299.12(W)

CB-24
TYPE CBC
TF=302.06
INV IN=299.02(E)
INV OUT=299.02(W)

CB-25
TYPE CBC
TF=302.06
INV IN=298.90(E)
INV OUT=298.90(N)

CB-26
TYPE CBC
TF=309.30
INV OUT=299.25(W)

CB-27
TYPE CBC
TF=309.30
INV IN=298.96(E)
INV IN=298.46(S)
INV IN=298.96(N)
INV OUT=298.46(W)

CB-28
TYPE CBCL
TF=305.50
INV IN=297.67(W)
INV IN=297.67(E)
INV OUT=297.67(N)

CB-29
TYPE CBC
TF=301.50
INV OUT=298.25(E)

CB-30
TYPE CBC
TF=306.00
INV IN=298.26(N)
INV IN=297.51(S)
INV OUT=297.51(W)

CB-31
TYPE CBC
TF=306.50
INV IN=299.50(N)
INV IN=299.50(E)
INV OUT=299.25(S)

CB-32
TYPE CBC
TF=311.60
INV OUT=299.21(S)

CB-33
TYPE CBC
TF=318.50
INV OUT=315.88(S)

CB-34
TYPE CBC
TF=318.50
INV IN=315.38(E)
INV IN=315.38(N)
INV OUT=315.38(W)

CB-35
TYPE CBC
TF=303.00
INV OUT=299.07(N)

CB-36
TYPE CBCL
TF=271.75
INV OUT=262.02(N)

CB-37
TYPE CBCL
TF=271.75
INV IN=260.62(S)

CB-38
TYPE CBC
TF=318.75
INV OUT=316.37(SW)

HS-01
60" DIA. MH
TF=307.50
INV IN=298.37(S)
INV OUT=298.37(N)

HS-02
60" DIA. MH
TF=307.40
INV OUT=298.37(N)
INV OUT=298.25(S)

HS-03 (1)
60" DIA. MH
TF=305.00

HS-03
60" DIA. MH
TF=305.00
INV IN=297.40(E)
INV OUT=297.40(N)

HS-04
48" DIA. MH
TF=310.00
INV IN=305.83(N)
INV OUT=305.83(S)

MH-01
60" DIA. MH
TF=308.50
INV IN=292.00(N)
INV OUT=292.00(W)

MH-02
60" DIA. MH
TF=305.75
INV IN=300.72(NE)
INV OUT=292.56(SW)

OCS-01
60" DIA. MH
TF=303.80
INV IN=296.00(N)
INV OUT=296.00(S)

OCS-03
TYPE CBCL
TF=304.75
INV OUT=301.00(SW)

GRADING AND DRAINAGE LEGEND

PROPERTY LINE	
LIMIT OF DISTURBANCE LINE AND CONTRACT LIMIT LINE	LOD
STORM LINE	
CATCH BASIN	
STORM MANHOLE	
FLARED END	
END WALL OR HEADWALL	
PROPOSED CONTOUR LINE	228
PROPOSED SPOT GRADE	x 100.00
ABBREVIATIONS – TC=TOP OF CURB – BC=BOTTOM OF CURB	x TC=100.00 BC=99.50
– TW=TOP OF WALL – BW=BOTTOM OF WALL	x TW=108.00 BW=100.00
PROPOSED SURFACE SLOPE	2%
ELECTRIC LINE	E E
ELECTRIC AND TELECOMMUNICATIONS LINES	E/T
GAS LINE	G G
WATER LINE	W W
SANITARY SEWER LINE	S
SANITARY SEWER FORCE MAIN	SFM
OVERHEAD LINE	OH OH
TRANSFORMER	T
HYDRANT	
UTILITY POLE	
SANITARY/STORM MANHOLE	
SANITARY/STORM CLEANOUT	CO
WATER VALVE	WV
GATE VALVE	GV
THRUST BLOCK	
GREASE TRAP	

© 2020 BL COMPANIES, INC. THESE DRAWINGS SHALL NOT BE UTILIZED BY ANY PERSON, FIRM OR CORPORATION WITHOUT THE SPECIFIC WRITTEN PERMISSION OF BL COMPANIES.

Architecture Engineering Environmental Land Surveying
BL Companies
355 Research Parkway
Meriden, CT 06450
(203) 630-1406
(203) 630-2615 Fax

Garden Homes

ROSE EQUITIES
Owner-Builders since 1949

STATE OF CONNECTICUT
CHRISTOPHER R. GAUDET
No. 28786
LICENSED
PROFESSIONAL ENGINEER

THE RESIDENCES AT MAIN
K & K DEVELOPERS, INC.
5085 MAIN STREET
TRUMBULL, CONNECTICUT

No.	Date	Desc.
1.	6/30/2020	REVISED PER STAFF COMMENTS
2.	8/10/2020	REVISED PER STAFF COMMENTS

REVISIONS

Designed	A.T.K.
Drawn	A.T.K.
Reviewed	J.J.S.
Scale	1"=40'
Project No.	1800513
Date	05/28/2020
CAD File: GD180051301	

Title
GRADING AND DRAINAGE PLAN

Sheet No.
GD-1

Xref (s): BD180051301 ; XY180051301 ; XYOSC13301 ; XC180051302 ; XC180051303

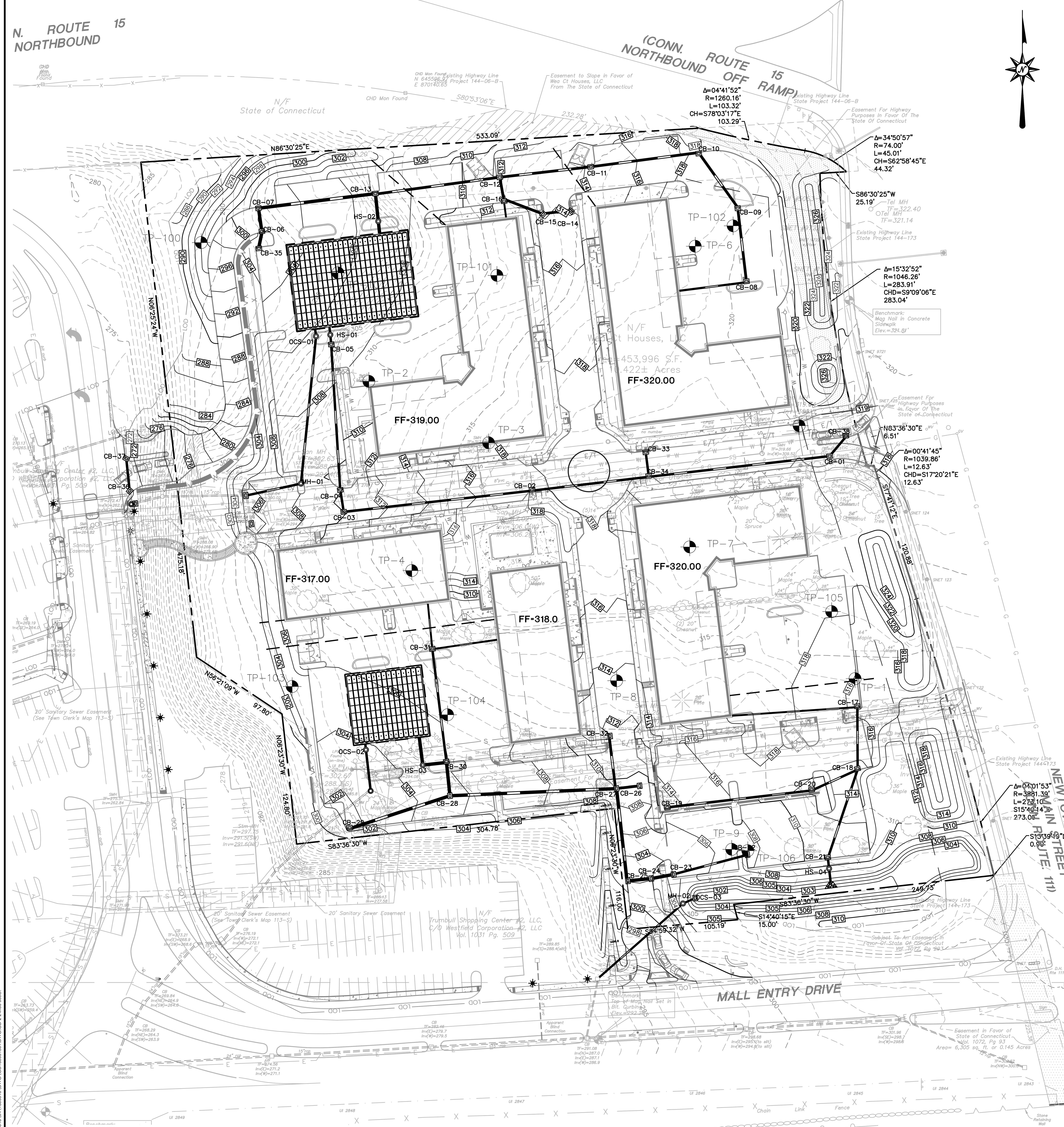

NOT FOR CONSTRUCTION
FOR PERMITTING PURPOSES ONLY

REFER TO SHEET GN-1 FOR
SITEWORK GENERAL NOTES

GEOTECHNICAL TEST PITS
OCTOBER 21, 2019 - GEI CONSULTANTS

TP-1 SURFACE EL.=314.0 BOTTOM EL.=308.0 GROUNDWATER NOT ENCOUNTERED

DEPTH (FT)	DESCRIPTION
0-0.33	F-C SAND AND NP FINES, LITTLE F-C GRAVEL, SUBANGULAR UP TO 6" BROWN, DRY. TOPSOIL. CONTAINS COBBLES, METAL WIRES AND ORGANIC FIBERS
0.3-4.0	F-C SAND AND F-C GRAVEL AND COBBLES, ANGULAR UP TO 8" LITTLE NP FINES, LIGHT BROWN, DRY
4.0-6.0	F-C GRAVEL, ANGULAR TO SUBANGULAR UP TO 6" AND COBBLES AND F-C SAND LITTLE NP FINES, HARD, DENSE AND GRAVELLY, BROWN TO ORANGE-BROWN, DRY. SLIGHT MOTTLING AT 4.0 FT. GROUNDWATER NOT ENCOUNTERED

TP-2 SURFACE EL.=309.0 BOTTOM EL.=305.0 GROUNDWATER NOT ENCOUNTERED

DEPTH (FT)	DESCRIPTION
0-1.0	F-C SAND AND NP FINES, LITTLE F-C GRAVEL ANGULAR UP TO 6", BROWN, DRY. CONTAINS ORGANIC FIBERS. TOPSOIL.
1.0-4.0	F-C GRAVEL AND F-C SAND, LITTLE NP FINES. ORANGE-BROWN TO LIGHT BROWN, DRY COARSE ANGULAR COBBLES UP TO 3.0 FT. GROUNDWATER OR SOIL MOTTLING NOT ENCOUNTERED.

TP-3 SURFACE EL.=316.0 BOTTOM EL.=314 GROUNDWATER NOT ENCOUNTERED

DEPTH (FT)	DESCRIPTION
0-0.5	F-C SAND AND NP FINES, LITTLE F-C GRAVEL, SUBROUNDED UP TO 5", BROWN, DRY. CONTAINS ORGANIC FIBER AND BRICK FRAGMENTS. TOPSOIL.
0.5-2.0	F-C SAND AND F-C GRAVEL AND COBBLES, ANGULAR UP TO 1", LITTLE NP FINES, LIGHT BROWN, DRY
2.0-4.0	F-C SAND AND F-C GRAVEL AND COBBLES (POTENTIAL WEATHERED ROCK) ANGULAR UP TO 1", LITTLE NP FINES, BROWN TO LIGHT BROWN, DRY. BUCKET SCRAPING PROBABLE ROCK AT 4.0 FT. SLIGHT MOTTLING OBSERVED AT 3.0 FT. GROUNDWATER NOT ENCOUNTERED. BACKFILLED AT 4.0 FT.

TP-4 SURFACE EL.=312.0 BOTTOM EL.=305.0 GROUNDWATER NOT ENCOUNTERED

DEPTH (FT)	DESCRIPTION
0-2.0	F-C SAND AND NP FINES, LITTLE F-C GRAVEL, BROWN, DRY. CONTAIN ORGANIC FIBERS. TOPSOIL.
2.0-3.5	F-C SAND, LITTLE NP IFNES, LITTLE F- C GRAVEL ANGULAR, LIGHT ORANGE- BROWN, DRY
3.5-5.0	F-C SAND, SOME F-M GRAVEL AND COBBLES, ANGULAR, NP FINES, GRAYISH BROWN TO LIGHT BROWN, DRY
5.0-7.0	F-C SAND, SOME F-M GRAVEL AND COBBLES, ANGULAR, NP FINES, BROWN, DRY. LIKELY WEATHERED ROCK OBSERVED AT BASE OF PIT SOIL MOTTLING OR GROUNDWATER NOT ENCOUNTERED.

TP-5 SURFACE EL.=319.5 BOTTOM EL.=313.5 GROUNDWATER NOT ENCOUNTERED

DEPTH (FT)	DESCRIPTION
0-0.5	F-C SAND AND NP FINES, SOME F-C GRAVEL AND COBBLES, ANGULAR UP TO 6", BROWN, DRY. TOPSOIL.
0.5-2.0	C GRAVEL, TRACE NP FINES, TRACE F SAND, DRY STONE DRAINAGE TRENCH WITH PIPE
2.0-6.0	F-C SAND AND F-C GRAVEL AND COBBLES ANGULAR UP TO 2.0 FT, LITTLE NP FINES, GRAYISH BROWN TO LIGHT BROWN, SOME SLIGHT MOTTLING OBSERVED AT 4.0 FT GROUNDWATER NOT ENCOUNTERED.

TP-6 SURFACE EL.=318.0 BOTTOM EL.=310.75 GROUNDWATER NOT ENCOUNTERED

DEPTH (FT)	DESCRIPTION
0-0.33	F-C SAND AND NP FINES, LITTLE F-C GRAVEL, SUBANGULAR UP TO 1" BROWN, DRY
0.3-1.0	DEGRADED ASPHALT, F-C ANGULAR GRAVEL UP TO 2", LITTLE F-C SAND, LITTLE NP FINES, BLACK, DRY.
1.0-3.0	F-C SAND AND NP-LP FINES, F-C GRAVEL, BROWN, DRY. FORMER TOPSOIL.
3.0-5.0	F-C SAND, SOME F-C GRAVEL, SUBANGULAR UP TO 6", LITTLE NP FINES LIGHT BROWN, DRY.
5.0-7.25	M-C GRAVEL AND COBBLES (ANGULAR 6"- 12") AND F-C SAND, LITTLE NP -LP FINES, ORANGE-BROWN TO BROWN, DRY TO MOIST. SOME SOIL MOTTING AT 5.5 FT. POSSIBLE WEATHERED ROCK NEAR BASE OF PIT. GROUNDWATER NOT ENCOUNTERED

TP-7 SURFACE EL.=319.0 BOTTOM EL.=313.0 GROUNDWATER NOT ENCOUNTERED

DEPTH (FT)	DESCRIPTION
0-0.33	F-C SAND AND NP FINES, LITTLE F-C GRAVEL, SUBANGULAR UP TO 1" BROWN, DRY. CONTAINS BRICK FRAGMENTS. TOPSOIL.
0.3-1.0	F-C SAND AND F-C GRAVEL, LITTLE NP FINES, BROWN, DRY
1.0-6.0	F-C SAND AND ANGULAR F-C COBBLES AND GRAVEL, LITTLE NP FINES, LIGHT BROWN TO ORANGE-BROWN, DRY. SLIGHT MOTTLING OBSERVED AT 4.0 FT. GROUNDWATER NOT ENCOUNTERED

TP-8 SURFACE EL.=147.0 BOTTOM EL.=136.5 GROUNDWATER NOT ENCOUNTERED

DEPTH (FT)	DESCRIPTION
0-2.0	F-C SAND, SOME NP FINES, SOME F-C GRAVEL, 1 ANGULAR UP TO 6", BROWN, DRY, WITH ASPHALT DEBRIS. CONTAINS ORGANIC FIBERS. TOPSOIL.
2.0-4.0	F-C SAND, LITTLE NP FINES, SOME F-C GRAVEL AND COBBLES UP TO 6", LIGHT BROWN, DRY
4.0-6.0	F-C GRAVEL AND COBBLES, SUBANGULAR UP TO 6" AND F-C SAND, LITTLE NP FINES, DENSE MATRIX, BROWN, DRY. GROUNDWATER OR SOIL MOTTLING NOT ENCOUNTERED.

TP-9 SURFACE EL.=306.0 BOTTOM EL.=299.5 GROUNDWATER NOT ENCOUNTERED

DEPTH (FT)	DESCRIPTION
0-0.7	F-C SAND AND NP FINES, LITTLE F-C GRAVEL AND COBBLES, ANGULAR UP TO 6" BROWN, DRY. CONTAINS ORGANIC FIBERS.TOPSOIL.
0.7-3.5	F- M SAND, SOME NP FINES, SOME F-C GRAVEL AND COBBLES, SUBROUNDED UP TO 6", LIGHT BROWN, DRY.
3.5-5.0	F-C SAND, LITTLE NP IFNES, SOME F-C GRAVEL AND COBBLES, SUBANGULAR UP TO 6", GRAYISH BROWN TO LIGHT BROWN, DRY.
5.0-6.5	F-C GRAVEL AND COBBLES, ANGULAR UP TO 6" AND F-C SAND, LITTLE NP FINES DENSE MATRIX, BROWN TO REDDISH BROWN, DRY TO MOIST. SLIGHT MOTTLING OBSERVED AT 6.0 FT. GROUNDWATER NOT ENCOUNTERED.

GEOTECHNICAL INFILTRATION TESTING
FEBRUARY 28, 2020 - GEI CONSULTANTS

TP-100 SURFACE EL.=289.0 BOTTOM EL.=283.5 GROUNDWATER NOT ENCOUNTERED

DEPTH (FT)	DESCRIPTION
0-0.5	6" TOPSOIL
0.5-3.0	SILTY SAND (SM);~ 60% F-C SAND, ~20% F-C GRAVEL UP TO 1", ~20% NP TO LP FINES, DARK BROWN, WET. CONTAIN ORGANIC FIBERS, COBBLES, RED BRICK, AND SMALL BOULDERS. STRONG ORGANIC-LIKE ODOR. FILL
3.0-5.5	SILTY SAND WITH GRAVEL (SM); ~60% F-C SAND, ~20% F-C GRAVEL UP TO 1", ~20% NP TO LP FINES, DARK BROWN, WET. CONTAIN ORGANIC FIBERS, COBBLES, RED BRICK, BOULDERS, PLASTIC AND METALLIC DEBRIS, AND ROTTED TIMBER PIECES. STRONG ORGANIC-LIKE ODOR. SLIGHT MOTTLING AT 4.0 FT. GROUNDWATER NOT ENCOUNTERED

TP-101 SURFACE EL.=310.5 BOTTOM EL.=304.0 GROUNDWATER ENCOUNTERED AT EL.=304.0

DEPTH (FT)	DESCRIPTION
0-0.5	6" TOPSOIL
0.5-1.0	WIDELY GRADED SAND WITH SILT (SW-SM); ~80% F-C SAND, ~10% F-C GRAVEL UP TO 1", ~10% NP TO LP FINES, DARK BROWN, MOIST. CONTAINS ORGANIC FIBERS, MODERATE ORGANIC-LIKE ODOR.
1.0-4.0	WIDELY GRADED SAND WITH SILT (SW-SM); ~80% F-C SAND, ~10% NP FINES, ~10% F-C GRAVEL, DARK BROWN TO BROWN, MOIST. FILL CONTAIN COBBLES, BUILDING DEBRIS, FORMER FOUNDATION ENCOUNTERED AT 2.0 FT. ENCOUNTERED FULL FOUNDATION AT 4.0 FT. TEST PIT EXTENDED TO GO BENEATH.
4.0-6.5	WIDELY GRADED SAND WITH SILT (SW-SM); ~80% F-C SAND, ~10% F-C GRAVEL, UP TO 1", ~10% NP FINES, GRAYISH BROWN, MOIST. ~30% COBBLES BY VOLUME. GROUNDWATER INFILTRATION OBSERVED AT 6.5 FT
INFILTRATION RESULTS	TEST 1 = 3.8 IN/HOUR TEST 2 = INVALID

TP-102 SURFACE EL.=319.0 BOTTOM EL.=311.0 GROUNDWATER ENCOUNTERED AT EL.=315.0

DEPTH (FT)	DESCRIPTION
0-0.5	6" TOPSOIL
0.5-2.0	WIDELY GRADED SAND WITH SILT (SW-SM);~ 80% F-C SAND, ~10% F-C GRAVEL UP TO 1", ~10% NP- LP FINES, DARK BROWN, MOIST. CONTAINS ORGANIC FIBERS, MODERATE ORGANIC-LIKE ODOR. FILL
2.0-4.0	SILTY SAND WITH GRAVEL (SM); ~50% F-C SAND, ~30% LP TO MP FINES, ~20% F-C GRAVEL UP TO 1", BROWN, WET. CONTAINS ROOT FRAGMENTS AND COBBLES. FILL
4.0-8.0	SILTY SAND WITH GRAVEL (SM); ~50% F-M SAND, ~35% LP-MP FINES, ~15% F-C GRAVEL, LIGHT ORANGE-BROWN, MOIST TO WET. CONTAINS SMALL COBBLES.
INFILTRATION RESULTS	TEST 1 = 3.8 IN/HOUR TEST 2 = INVALID

TP-103 SURFACE EL.=301.0 BOTTOM EL.=296.0 GROUNDWATER NOT ENCOUNTERED

DEPTH (FT)	DESCRIPTION
0-1.0	SILTY SAND (SM); ~75% F-C SAND, ~15% NPFINES, ~10% F-C GRAVEL UP TO 1", DARK BROWN, MOIST. CONTAINS ORGANIC FIBERS AND COBBLES.
1.0-5.0	SILTY SAND WITH GRAVEL (SM); ~50% F-C SAND, ~30% NP TO LP FINES, ~20% F-C GRAVEL UP TO 1", GRAY-BROWN, MOIST. CONTAINS COBBLES. REFUSAL @ 5.0 FT. ON BOULDER OR WEATHERED ROCK
INFILTRATION RESULTS	TEST 1 = 5.9 IN/HOUR TEST 2 = 9.1 IN/HOUR

TP-104 SURFACE EL.=309.0 BOTTOM EL.=302.0 GROUNDWATER NOT ENCOUNTERED

DEPTH (FT)	DESCRIPTION
0-0.5	6" TOPSOIL
0.5-4.0	SANDY SILT (ML): ~55% LP-MP FINES, ~45% F SAND, ORANGE-BROWN, MOIST.
4.0-7.0	WIDELY GRADED SAND (SW); ~85% F-M SAND, ~10% F-C GRAVEL, ~5% NP FINES, DARK GRAY, MOIST.
INFILTRATION RESULTS	TEST 1 = 2.2 IN/HOUR TEST 2 = 3.8 IN/HOUR

TP-105 SURFACE EL.=313.0 BOTTOM EL.=304.0 GROUNDWATER ENCOUNTERED AT EL.=304.5

DEPTH (FT)	DESCRIPTION
0-1.0	SILTY SAND WITH GRAVEL (SM); 45% F-C SAND, 30% NP FINE, 25% F-C GRAVEL AND COBBLES UP TO 12", BROWN TO DARK BROWN, DRY. CONTAIN ORGANIC FIBERS, FRAGMENTS OF BRICK AND CONCRETE BLOCK.
1.0-2.5	SILTY SAND WITH GRAVEL (SM); 60% F-C SAND, 25% F-C GRAVEL AND COBBLES UP TO 12 IN., 15% NP FINES, BROWN TO ORANGE BROWN, DRY.
2.5-9.0	SILTY SAND WITH GRAVEL (SM); ~65% F-C SAND, ~ 25% F-C GRAVEL, ~20% NP -LP FINES, BROWN TO GRAYISH BROWN, DRY TO WET AT 8.5' GROUNDWATER ENCOUNTERED AT 8.5 FT.

TP-106 SURFACE EL.=306.0 BOTTOM EL.=299.5 GROUNDWATER ENCOUNTERED AT EL.=299.5

DEPTH (FT)	DESCRIPTION
0-0.5	6" TOPSOIL
0.5-1.0	WIDELY GRADED SAND WITH SILT (SW-SM); ~80% F-C SAND, ~10% NP FINES, ~10% F-C GRAVEL, BROWN, MOIST. CONTAIN ORGANIC FIBERS.
1.0-6.5	WIDELY GRADED SAND WITH SILT AND GRAVEL (SW-SM); ~75% F-C SAND, 15% F-C GRAVEL UP TO 1", 10% NP-LP FINES, BROWN, MOIST. CONTAINS COBBLES/SMALL BOULDERS UP TO 30% BY VOLUME. CONCRETE DEBRIS BETWEEN 1.0 AND 4.0 FT. GROUNDWATER ENCOUNTERED AT 6.5 FT.
INFILTRATION RESULTS	TEST 1 = 9.9 IN/HOUR TEST 2 = INVALID

TP-107 SURFACE EL.=295.5 BOTTOM EL.=288.0 GROUNDWATER ENCOUNTERED AT EL.=288.0

DEPTH (FT)	DESCRIPTION
0-0.5	SILTY SAND WITH GRAVEL (SM); ~45% F-C SAND, ~35% NP FINES, ~20% F-C GRAVEL, DARK BROWN, DRY. CONTAIN ORGANIC FIBERS, COBBLES/BOULDERS, ASPHALT, CONCRETE DEBRIS.
0.5-3.0	SILTY SAND WITH GRAVEL (SM); ~45% F-C SAND, ~35% F-C GRAVEL AND COBBLES, ~20% NP FINES, BROWN, DRY. CONTAIN ORGANIC FIBERS, COBBLES/BOULDERS, ASPHALT, CONCRETE DEBRIS.
3.0-3.5	LAYER OF BROKEN ASPHALT
3.5-5.5	SILTY SAND WITH GRAVEL (SM); ~35% F-C SAND, ~35% F-C GRAVEL AND COBBLES UP TO 24 IN., ~30% NP FINES, BROWN, DRY TO MOIST.
5.5-7.5	SILTY SAND WITH GRAVEL (SM); ~50% F-C SAND, ~35% F-C GRAVEL AND COBBLES UP TO 24 IN., ~15% NP FINES, ORANGE TO BROWN, DRY TO MOIST. WITH WEATHERED ROCK FRAGMENTS NEAR BASE.

Architecture
Engineering
Environmental
Land Surveying

BL Companies

355 Research Parkway
Meriden, CT 06450
(203) 630-1406
(203) 630-2615 Fax

Garden Homes

ROSE EQUITIES
Owner-Builders since 1949

STATE OF CONNECTICUT CHRISTOPHER D. GAGNON No. 26798 LICENSED PROFESSIONAL ENGINEER

THE RESIDENCES AT MAIN
K & K DEVELOPERS, INC.
5085 MAIN STREET
TRUMBULL, CONNECTICUT

REVISIONS

No.	Date	Desc.
1.	6/30/2020	REVISED PER STAFF COMMENTS
2.	8/10/2020	REVISED PER STAFF COMMENTS

Designed	A.T.K.
Drawn	A.T.K.
Reviewed	J.J.S.
Scale	1"=50'
Project No.	1800513
Date	05/28/2020
CAD File:	GD180051301

Title
GRADING AND DRAINAGE PLAN

Sheet No.
GD-2

Xref (s): ; BD180051301 ; XY180051301 ; XC180051301 ; XY05C133801 ; XY180051302 ; XC180051302 ; XC180051303

8/17/2020, JSOJKA, G:\JOBS18\04\1800513\DWG\GD180051301.DWG,GD-2 24X36 50SC.

© 2020 BL COMPANIES, INC. THESE DRAWINGS SHALL NOT BE UTILIZED BY ANY PERSON, FIRM OR CORPORATION WITHOUT THE SPECIFIC WRITTEN PERMISSION OF BL COMPANIES.

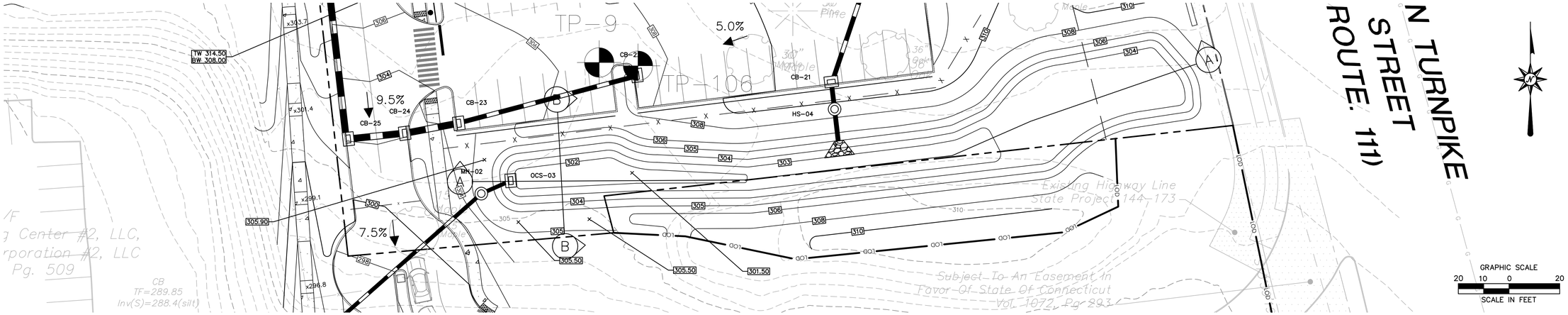

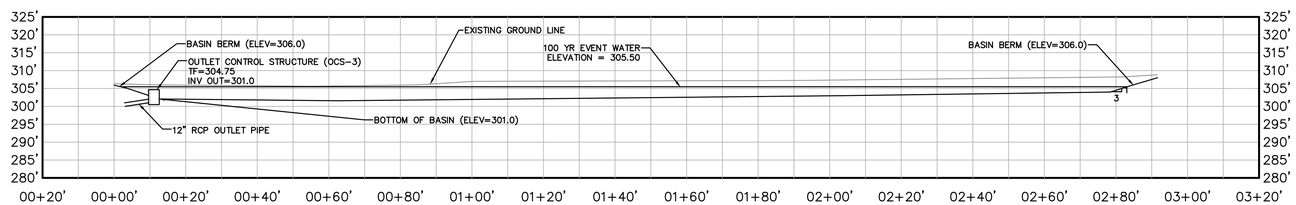

SECTION A-A

SCALE: 1'=20'

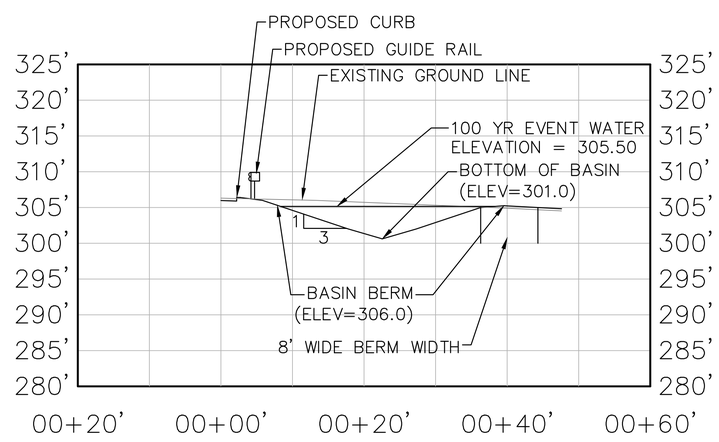

SECTION B-B

SCALE: 1'=10'

REFER TO SHEET GN-1 FOR SITEWORK GENERAL NOTES

NOT FOR CONSTRUCTION FOR PERMITTING PURPOSES ONLY

GRAPHIC SCALE
60 30 0 60
SCALE IN FEET

Architecture
Engineering
Environmental
Land Surveying

BL Companies

355 Research Parkway
Meriden, CT 06450
(203) 630-1406
(203) 630-2615 Fax

Garden Homes

ROSE EQUITIES
Owner-Builders since 1949

STATE OF CONNECTICUT
CHRISTOPHER R. GAUDIO
No. 28798
LICENSED
PROFESSIONAL ENGINEER

THE RESIDENCES AT MAIN
K & K DEVELOPERS, INC.
5085 MAIN STREET
TRUMBULL, CONNECTICUT

REVISIONS

No.	Date	Desc.
1.	6/30/2020	REVISED PER STAFF COMMENTS
2.	8/10/2020	REVISED PER STAFF COMMENTS

Designed	A.T.K.
Drawn	J.E.S.
Reviewed	J.J.S.
Scale	SEE SHEET
Project No.	1800513
Date	05/28/2020
CAD File: GD180051301	

Title

STORMWATER POND CROSS SECTION

Sheet No.

GD-3

Xref (s): : BD180051301 ; XY180051301 ; XC180051301 ; XYXSC130801 ; XY180051302 ; XC180051302 ; XC180051303

8/17/2020, JSO.PA, G:\JOBS\18\KA\180513\DWG\GD180051301.DWG GD-3 24X36 ARCH

© 2020 BL COMPANIES, INC. THESE DRAWINGS SHALL NOT BE UTILIZED BY ANY PERSON, FIRM OR CORPORATION WITHOUT THE SPECIFIC WRITTEN PERMISSION OF BL COMPANIES.