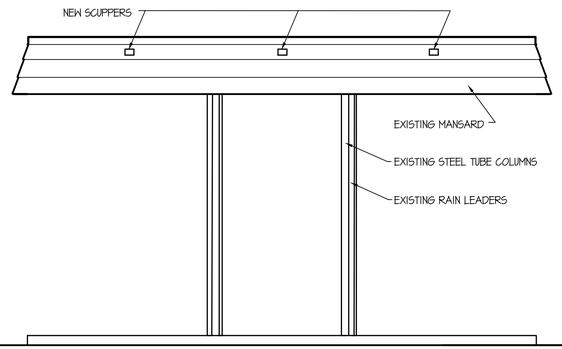

C1 ELEVATION
SCALE: 1/4" = 1'-0"

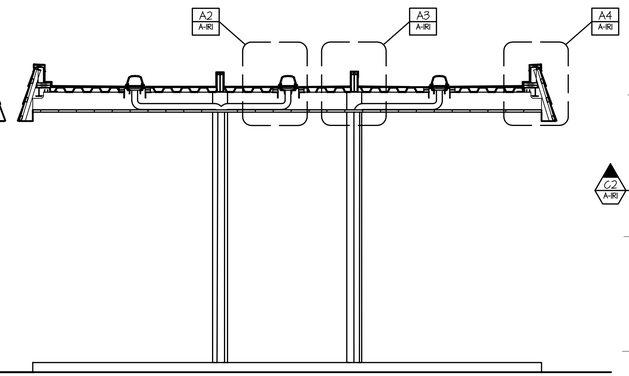

C2 SECTION
SCALE: 1/4" = 1'-0"

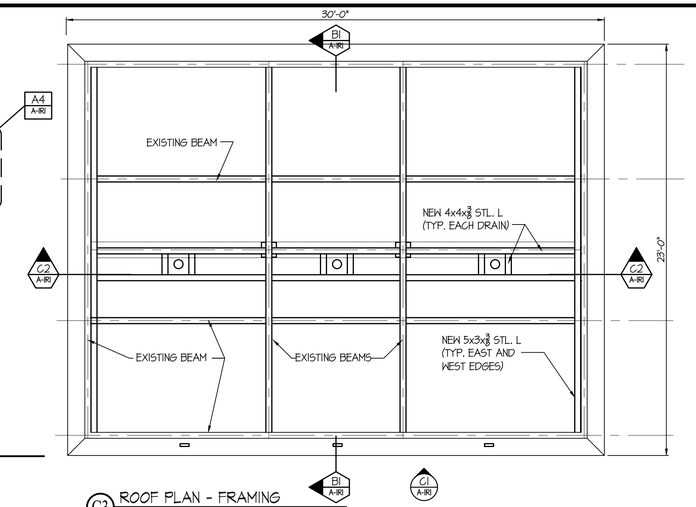

C3 ROOF PLAN - FRAMING
SCALE: 1/4" = 1'-0"

WELDING IS NOT PERMITTED ON THIS JOBSITE.

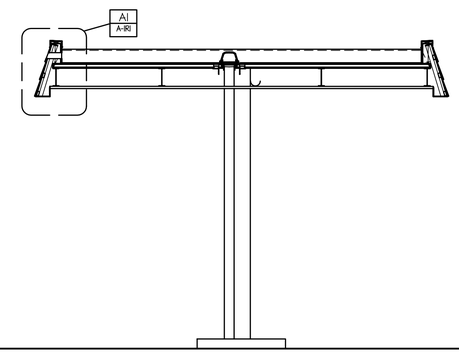

B1 SECTION
SCALE: 1/4" = 1'-0"

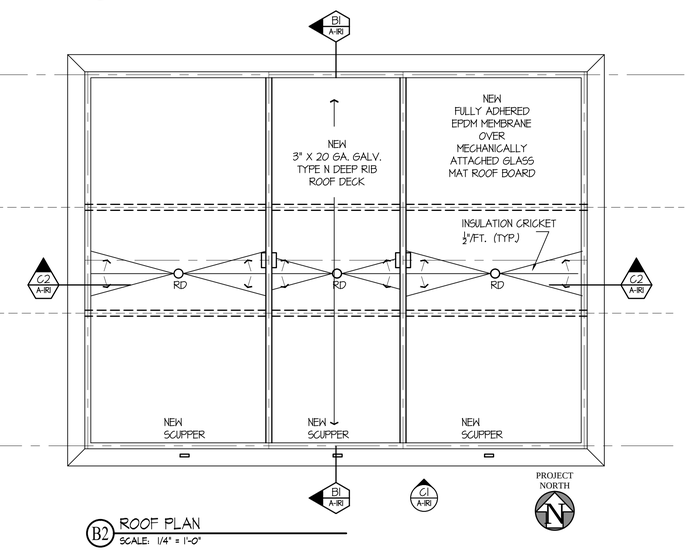

B2 ROOF PLAN
SCALE: 1/4" = 1'-0"

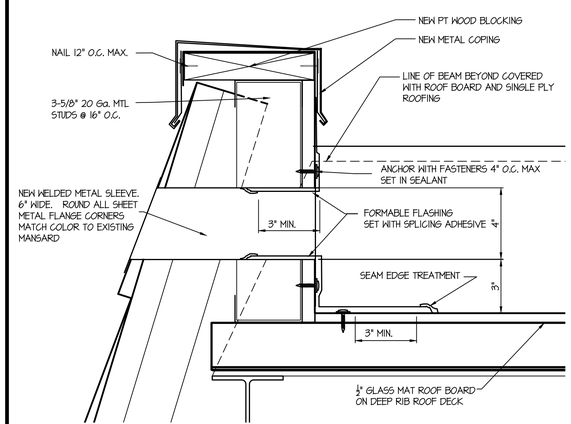

A1 PARAPET DETAIL
WITH SCUPPER
SCALE: 3" = 1'-0"

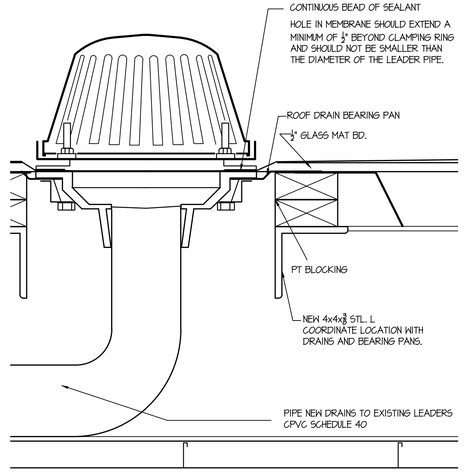

A2 DRAIN DETAIL
SCALE: 3" = 1'-0"

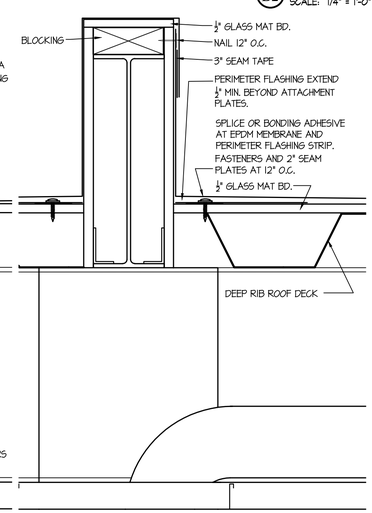

A3 DETAIL AT BEAM
SCALE: 3" = 1'-0"

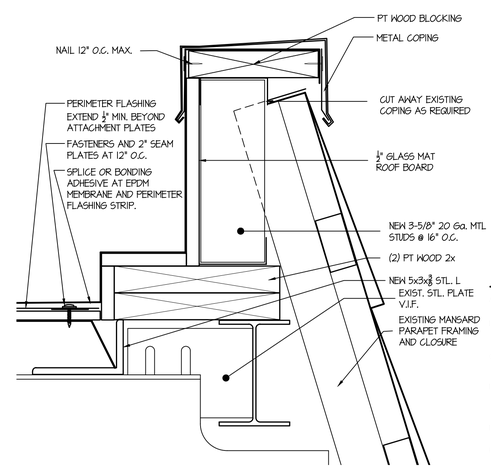

A4 PARAPET DETAIL
EAST AND WEST
SCALE: 3" = 1'-0"

DESIGN BASIS

GOVERNING CODE .....2005 STATE BUILDING CODE +
2009 CONNECTICUT AMENDMENT

GENERAL NOTES:

SHOP DRAWINGS ARE TO BE CHECKED BY THE CONTRACTOR AND BEAR THE CHECKER'S INITIALS BEFORE BEING SUBMITTED TO THE ENGINEER.

THE CONTRACTOR SHALL VERIFY ALL DIMENSIONS, ELEVATIONS, ANGLES, AND EXISTING CONDITIONS BEFORE PROCEEDING WITH ANY WORK.

IT IS THE CONTRACTOR'S SOLE RESPONSIBILITY TO FOLLOW ALL APPLICABLE SAFETY CODES AND REGULATIONS DURING ALL PHASES OF CONSTRUCTION.

IT IS THE CONTRACTOR'S SOLE RESPONSIBILITY TO DETERMINE CONSTRUCTION PROCEDURE AND SEQUENCE, AND TO ENSURE THE SAFETY OF THE EXISTING BUILDING AND ITS COMPONENT PARTS DURING CONSTRUCTION. THIS INCLUDES THE ADDITION OF WHATEVER SHORING, BRACING, ETC. THAT MAY BE REQUIRED.

WHERE DETAILS ARE NOT INDICATED, THEY SHALL BE CONSIDERED TYPICAL AND APPLY AT SAME AND SIMILAR CONDITIONS.

WORK THESE DRAWINGS WITH THOSE OF OTHER TRADES FOR LOCATIONS OF OPENINGS, RECESSES, BUILT-IN WORK, ETC.

STRUCTURAL STEEL

MATERIALS:

STRUCTURAL STEEL BEAMS.....ASTM A572/992
ANGLES, MISCELLANEOUS PLATES, CHANNELS AND BARS.....ASTM A36
TUBE COLUMNS.....Fy=46 ksi.....ASTM A500
BOLTS.....ASTM A325
WELDING ELECTRODE.....ASTM E 70

SHOP AND ERECTION DRAWINGS SHALL BE SUBMITTED FOR ALL STRUCTURAL STEEL WORK IN ACCORDANCE WITH THE CONTRACT DOCUMENTS.

STRUCTURAL STEEL SHALL CONFORM TO THE CURRENT "AISC SPECIFICATION FOR THE DESIGN, FABRICATION, AND ERECTION OF STRUCTURAL STEEL FOR BUILDINGS", AND THE "AISC CODE OF STANDARD PRACTICE FOR STEEL BUILDINGS AND BRIDGES".

WELDING IS NOT PERMITTED ON THIS JOB SITE.

CONNECTIONS:

CONNECTIONS SHALL CONFORM TO ALL REQUIREMENTS OF THE "AISC SPECIFICATION FOR THE DESIGN, FABRICATION, AND ERECTION OF STRUCTURAL STEEL FOR BUILDINGS", LATEST EDITION, AND THE "SPECIFICATION FOR STRUCTURAL STEEL JOINTS USING ASTM A325 OR A490 BOLTS" APPROVED APRIL 26, 1978.

NEW STRUCTURAL STEEL SHALL BE FASTENED TO EXISTING STRUCTURAL STEEL USING 3/4" DIAMETER BOLTS AT 16" O.C. HOLES SHALL BE MAGNETIC DRILLED.

ALL STRUCTURAL STEEL, FROM DELIVERY TO THE JOB SITE TO AFTER ERECTION SHALL CONFORM TO ALL REQUIREMENTS OF ASTM A6.

THE CONTRACTOR SHALL PROVIDE POUR STOPS, CELL CLOSURES, AND ALL OTHER ACCESSORIES REQUIRED FOR A COMPLETE INSTALLATION.

ALL PERMANENTLY EXPOSED STRUCTURAL STEEL SHALL BE HOT DIP GALVANIZED IN ACCORDANCE WITH ASTM A123.

SHOP PRIMER SHALL BE TNEMEC 10-99 MODIFIED ALKYD RUST INHIBITIVE GRAY PRIMER. SURFACE PREPARATION SHALL BE IN ACCORDANCE WITH STRUCTURAL STEEL PAINTING COUNCIL SPECIFICATION SP-2 "HAND TOOL CLEANING". MINIMUM DRY FILM THICKNESS OF SHOP PRIMER 2.0 MILS.

BOLT HOLES SHALL BE MAGNETIC DRILLED. FLAME CUT HOLES ARE NOT ACCEPTABLE.

COMMENCEMENT OF STRUCTURAL STEEL WORK WITHOUT NOTIFYING THE ARCHITECT OF ANY DISCREPANCIES WILL BE CONSIDERED ACCEPTANCE OF PRECEDING WORK.

INSPECTION AND TESTING OF ALL WELDING AND HIGH STRENGTH BOLTING SHALL BE PERFORMED BY AN INDEPENDENT TESTING LABORATORY, BE PAID BY THE OWNER AND BE APPROVED BY THE ENGINEER. THE INSPECTOR SHALL OBSERVE INSTALLATION OF BOLTS AND TEST WITH A CALIBRATED TORQUE WRENCH NOT LESS THAN 25% OF THE BOLTS AND NOT LESS THAN TWO BOLTS, SELECTED AT RANDOM, IN EACH CONNECTION.

FOUR COPIES OF ALL INSPECTION TEST REPORTS SHALL BE SUBMITTED TO THE ARCHITECT WITHIN TEN (10) WORKING DAYS OF THE DATE OF INSPECTION.

METAL ROOF DECK

METAL ROOF DECK SHALL BE 3" x 20 GAGE TYPE N GALVANIZED (G60) WITH NESTING SIDE SEAMS. DECK SHALL CONFORM TO THE "BASIC DESIGN SPECIFICATION" AS ADOPTED BY THE STEEL DECK INSTITUTE.

ROOF DECK SHALL BE FURNISHED IN SHEET LENGTHS SUFFICIENT TO EXTEND OVER FOUR SUPPORTS (THREE SPANS).

WELDING WILL NOT BE ALLOWED ON THE JOBSITE.METAL ROOF DECK SHALL BE FASTENED TO SUPPORTING STEEL WITH POWDER ACTUATED DECK FASTENERS AS MANUFACTURED BY HILTI OR APPROVED EQUAL, SPACED 12" O.C. INTERMEDIATE SIDE LAP CONNECTIONS SHALL BE MADE WITH #10 SELF TAPPING SCREWS AT 12" ON CENTER MAXIMUM.

COLD-FORMED METAL FRAMING

COLD-FORMED METAL FRAMING UNITS FOR THIS PROJECT INCLUDE "C" SHAPED STEEL STUDS, TRACKS, BUILT-UP LINTELS, ETC. AS REQUIRED FOR A COMPLETE INSTALLATION.

SHOP DRAWINGS AND DATA: SUBMIT SHOP DRAWINGS FOR SPECIAL COMPONENTS AND INSTALLATIONS NOT FULLY DIMENSIONED OR DETAILED IN MANUFACTURER'S PRODUCT DATA.

INCLUDE PLACING DRAWINGS FOR FRAMING MEMBERS SHOWING SIZE AND GAUGE DESIGNATIONS, NUMBERS, TYPE, LOCATION AND SPACING. INDICATE ALL SUPPLEMENTAL BRACING, SPLICES, ACCESSORIES AND DETAILS AS REQUIRED FOR PROPER INSTALLATION.

COMPONENT DESIGN: CALCULATE STRUCTURAL PROPERTIES OF STUDS AND ACCESSORIES IN ACCORDANCE WITH AISI "SPECIFICATION FOR THE DESIGN OF COLD-FORMED STEEL STRUCTURAL MEMBERS". DESIGN OF COLD-FORMED STEEL STUDS AND FRAMING SHALL BE SUPERVISED, SIGNED AND SEALED BY A PROFESSIONAL ENGINEER LICENSED IN THE STATE OF CONNECTICUT.

MANUFACTURER SHALL BE ONE OF THE FOLLOWING OR APPROVED EQUAL:

BOSTWICK STEEL FRAMING CO.
DALE INDUSTRIES, INC.
MILCOR DIV., INRYCO INC.
MARINO INDUSTRIES CORP.

SYSTEM COMPONENTS: WITH EACH TYPE OF METAL FRAMING REQUIRED, PROVIDE MANUFACTURER'S STANDARD STEEL RUNNERS (TRACKS), BLOCKING, LINTELS, CLIP ANGLES, SHOES, REINFORCEMENTS, FASTENERS, AND ACCESSORIES AS RECOMMENDED BY MANUFACTURER FOR APPLICATION INDICATED, AS NEEDED TO PROVIDE A COMPLETE METAL FRAMING SYSTEM.

COLD-FORMED MATERIALS AND FINISHES:

FOR 16 GAUGE AND HEAVIER UNITS, FABRICATE METAL FRAMING COMPONENTS OF STRUCTURAL QUALITY STEEL SHEET WITH A MINIMUM YIELD POINT OF 40,000 PSI, ASTM A446, A570, OR A611.

FOR 18 GAUGE AND LIGHTER UNITS, FABRICATE METAL FRAMING COMPONENTS OF COMMERCIAL QUALITY STEEL SHEET WITH A MINIMUM YIELD POINT OF 33,000 PSI, ASTM A446, A 570, OR A611.

PROVIDE GALVANIZED FINISH TO METAL FRAMING COMPONENTS COMPLYING WITH ASTM A525, MINIMUM G-60 COATING.

ELECTRODES FOR WELDING: COMPLY WITH AWS CODE.

GALVANIZING REPAIR PAINT: HIGH ZINC DUST CONTENT PAINT FOR REPAIR OF GALVANIZED SURFACES DAMAGED BY WELDING, COMPLYING WITH M.I. SPEC. MIL-P-21035.

PREFABRICATION: STRUCTURAL FRAMING COMPONENTS MAY BE PREFABRICATED INTO PANELS PRIOR TO ERECTION. FABRICATE PANELS PLUMB, SQUARE, TRUE TO LINE AND BRACED AGAINST RACKING WITH JOINTS WELDED. PERFORM LIFTING OF PREFABRICATED PANELS TO PREVENT DAMAGE OR DISTORTION.

FASTENINGS: SIMILAR COMPONENTS MAY BE ATTACHED BY WELDING,TO BE DONE ONLY OFF SITE. ATTACH DISSIMILAR COMPONENTS BY WELDING, BOLTING, OR SCREW FASTENERS, AS STANDARD WITH MANUFACTURER. WELDING IS NOT PERMITTED ON SITE.

INSTALLATION: INSTALL METAL FRAMING SYSTEMS IN ACCORDANCE WITH MANUFACTURER'S PRINTED OR WRITTEN INSTRUCTIONS AND RECOMMENDATIONS, UNLESS OTHERWISE INDICATED.

GENERAL NOTES:

A. ALL CONTRACTORS SHALL VISIT THE PROJECT SITE AND FAMILIARIZE THEMSELVES WITH ALL BUILDING AND WORKING CONDITIONS BEFORE SUBMITTING A BID.

B. ALL CONTRACTORS TO BE RESPONSIBLE FOR KEEPING AREAS ADJACENT TO WORK AREA CLEAN AND FREE FROM ALL MATERIALS CONNECTED WITH ALTERATION/RENOVATION WORK. AREAS TO BE CLEANED AT THE END OF EACH WORK DAY.

C. ALL SURFACES DISTURBED BY DEMOLITION & NEW CONSTRUCTION OPERATIONS SHALL BE PATCHED & REPAIRED TO MATCH & BLEND W/ EXISTING ADJACENT SURFACES UNLESS NOTED OTHERWISE.

D. ALL CONTRACTORS SHALL VERIFY ALL DIMENSIONS IN THE FIELD AS REQUIRED BEFORE SUBMITTING SHOP DRAWINGS AND/OR PRIOR TO PERFORMING ALL WORK REQUIRED AS SHOWN ON THESE DRAWINGS. ALL DISCREPANCIES THAT MAY IMPEDE THE FINISHED PRODUCT OF THIS CONTRACT SHALL BE DISCUSSED WITH THE ARCHITECT BEFORE PRECEDING WITH WORK.

E. ANY CUTTING, PATCHING OR DEMOLITION FOR THIS PROJECT SHALL BE PERFORMED BY EACH CONTRACTOR AS REQUIRED.

F. ALL WORK SHALL CONFORM TO EXISTING CODES, REGULATIONS, AND SEISMIC REQUIREMENTS, AND BE DONE IN A FIRST CLASS CRAFTSMANLIKE MANNER, ACCORDING TO GOOD CONSTRUCTION PRACTICES.

G. ALL CONTRACTORS SHALL OBTAIN AND PAY FOR ANY PERMITS REQUIRED FOR HIS DISCIPLINE.

H. ALL CONTRACTORS TO HAVE ADEQUATE INSURANCE AND SHALL SUBMIT PROOF OF SAME BEFORE STARTING WORK.

I. RELOCATE EXISTING ELECTRICAL WIRING LOCATED ON EXISTING STEEL BEAMS AS REQUIRED TO INSTALL NEW METAL DECK.

ANTINOZZI ASSOCIATES
ARCHITECTURE & INTERIORS

COPYRIGHT 2014 BY:

ANTINOZZI ASSOCIATES, P.C.
271 Fairfield Avenue
Bridgeport, Connecticut 06604
Tel: (203) 377-1300
Fax: (203) 378-3002

301 Merritt 7
Norwalk, Connecticut 06851
Tel: (203) 956-5460 www.antinozzi.com

These documents have been prepared specifically for this project. Reproduction or other use of these documents is prohibited without the approval of the Architect.

CERTIFICATION:

REVISIONS:

#	DATE	DESCRIPTION
1	11-17-14	REVISION FOR RE-BID

FUELING STATION CANOPY

New Roofing System

366 CHURCH HILL ROAD
TRUMBULL, CONNECTICUT 06611

DRAWING TITLE:

ROOF PLAN & DETAILS

SCALE:	DRAWN BY:	REVIEWED BY:
AS NOTED	AKR	PAL

DRAWING NO.

A-1R1

DATE:	JOB NUMBER:
8 OCTOBER 2014	14047